SEA-DOO®

Racing Handbook

1998

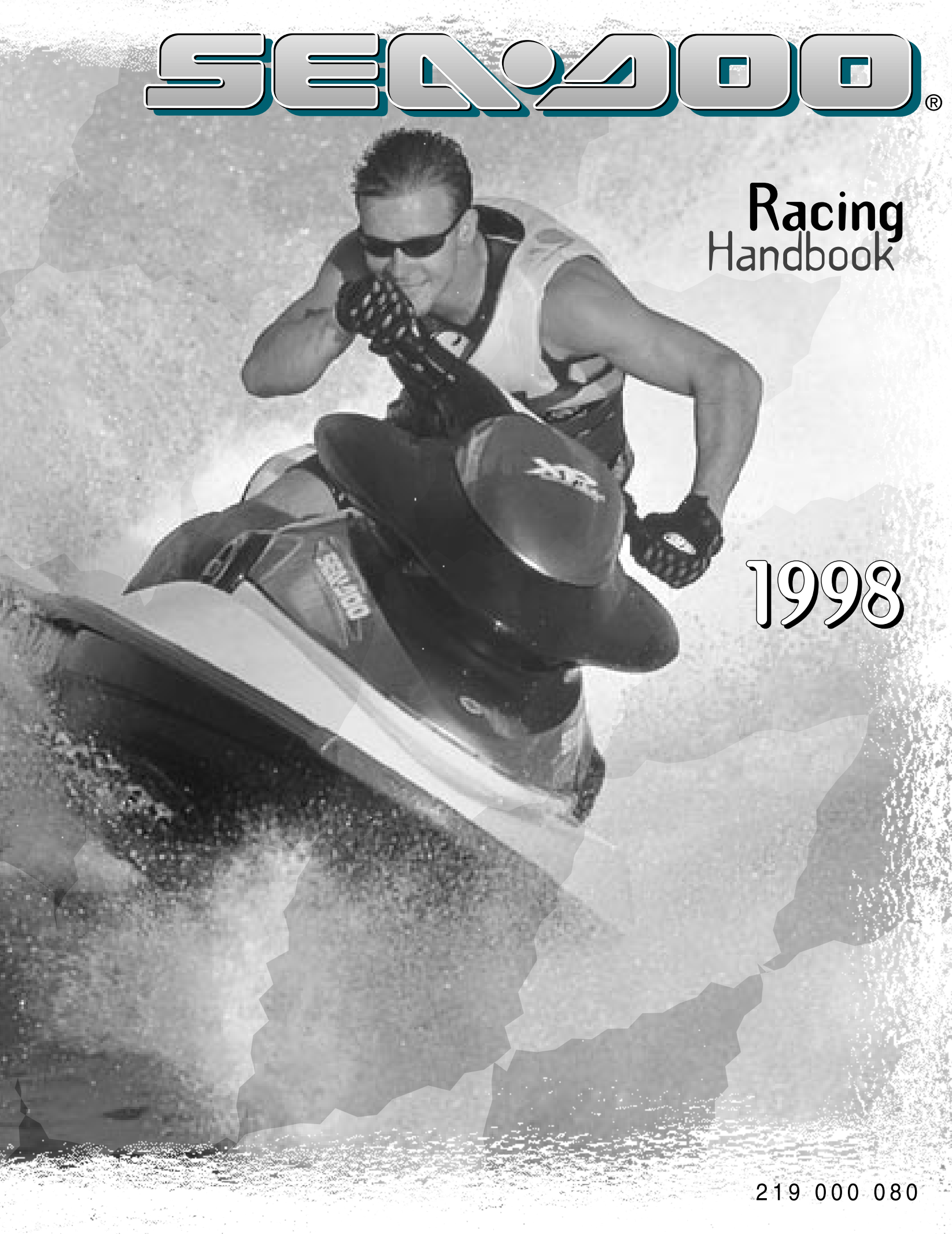

219 000 080

SEA-DOO
RACING HANDBOOK

◆ WARNING

This information relates to the preparation and use of watercraft in competitive events. Bombardier Inc. disclaims liability for all damages and/or injuries resulting from improper use of its contents. We strongly recommend that these modifications be carried out and/or verified by a highly skilled professional watercraft racing mechanic. It is understood that racing or modification of any Bombardier - made watercraft may voids the watercraft warranty. Racing of any product, including watercraft, involves an assumption of risk by each competitor. In watercraft racing these risks include, but are not limited to: drowning, death, broken bones, collision with another watercraft, and falls onto the watercraft or into the water. The danger and risk is multiplied as speed is increased. Protective clothing and equipment **cannot** protect a racer in all conditions.

All racers should obtain a copy of the model year *Shop Manual* and necessary tools before attempting any mechanical work. Many aspects of watercraft "fine tuning, blueprinting, and modification" are critical to insure safe and proper watercraft operation. If you are not absolutely sure how to accomplish an adjustment, procedure, or modification, please have an authorized Sea-Doo dealer who is involved in racing perform the task.

Some Sea-Doo watercraft may have to be altered from their stock configuration (even in the stock class) in order to meet racing requirements established by the race sanctioning body. It is important to refer to the racing rule book for direction.

When racing, do so within the confines of the official race meet. Do not disturb other boaters or others using the waterway.

KEEP YOUR SEA-DOO RACE LEGAL

INTRODUCTION

Welcome to the world of SEA-DOO watercraft racing. The information in this manual contains the theory and operating principals of the SEA-DOO watercraft systems. It provides the foundation needed for setting up the watercraft for racing purposes.

All racers should obtain a copy of the model year *Shop Manual* and necessary tools before attempting any mechanical work.

Many aspects of watercraft "fine tuning and blueprinting", which are contained in this handbook are critical to insure safe and proper watercraft operation. If you are not absolutely sure how to accomplish an adjustment or procedure outlined in your service manual, please have your local authorized SEA-DOO dealer perform the task.

The handbook also provides information on race day activities, rider presentation, general racing practices, sponsor solicitation and other useful tips to successful racing.

Some sea-doo watercraft may need to be altered from their stock configuration (even in the stock class) in order to meet racing guidelines established by race sanctioning bodies. It is important to refer to the racing rule book for direction.

When racing, do so within the confines of the official race meet. Do not disturb other boaters or others using the waterway. KEEP YOUR SEA-DOO WATERCRAFT LEGAL!

Good luck and success in your race.

Bombardier Inc.

TABLE OF CONTENTS

INTRODUCTION II
SAFETY VI
RACE SANCTIONING ASSOCIATIONS VI

SECTION 01 - GENERAL RACING INFORMATION

PREPARING FOR RACE DAY ACTIVITIES 01-2
PREPARING FOR A SAFETY INSPECTION 01-5
PRERACE MAINTENANCE 01-6
MAINTENANCE BETWEEN RACES 01-7
EQUIPMENT AND SPARE PARTS TO BRING TO THE RACE 01-8
PIT AREA PRESENTATION 01-8
INTERACTION WITH RACE OFFICIALS 01-9
SPONSORSHIP AND SOLICITATION 01-10
THE PROFESSIONALS POINT OF VIEW 01-11

SECTION 02 - HULL PREPARATION

PREPARING THE HULL FOR INSPECTION 02-2
MEASURING THE HULL 02-2
TRUING THE HULL 02-2
PAINTING 02-3
CONCEPT™ PAINTING PROCEDURE 02-3
DELTA™ PAINTING PROCEDURE 02-4
SEA-DOO PAINT CODES 02-5
STORAGE COVER PAINT CODES 02-6
ENGINE PAINT CODES 02-6
EXHAUST SYSTEM PAINT CODES 02-6
MODELS WITH CORRESPONDING BODY/HULL PAINT CODES 02-6
SEALING OF BODY COMPONENTS 02-8
HULL AND BODY MAINTENANCE TIPS 02-8
LIGHTWEIGHT PARTS 02-8
SPONSON KITS 02-8

TABLE OF CONTENTS

SECTION 03 - ENGINE PREPARATION

ENGINE TUNING CAUTIONS 03-2
BASIC ENGINE TERMINOLOGY 03-2
BASIC ENGINE COMPONENTS 03-3
ENGINE CONFIGURATION 03-7
BASIC ENGINE THEORY 03-8
COMBUSTION PROCESS 03-10
SQUISH AREA 03-13
COMBUSTION CHAMBER VOLUME MEASUREMENT 03-14
CALCULATING THE COMPRESSION RATIO 03-16
CALCULATING MACHINING CYLINDER HEAD HEIGHT VERSUS COMBUSTION CHAMBER VOLUME 03-17
OCTANE REQUIREMENTS FOR ROTAX ENGINES 03-17
RAVE VALVE OPERATION 03-17
FUNCTION OF THE ROTARY VALVE INTAKE SYSTEM 03-19
ROTARY VALVE TIMING 03-24
ROTARY VALVE IDENTIFICATION 03-26
CYLINDER PORTING MAPS 03-28
787 ENGINE MODIFICATIONS 03-32
947 ENGINE MODIFICATIONS 03-36
ENGINE LEAKAGE TEST 03-39
ENGINE LEAKAGE DIAGNOSTIC FLOW CHART 03-44
CRANKSHAFT INSPECTION 03-45
ENGINE BREAK-IN PROCEDURE 03-48
FUNCTION OF AN EXHAUST SYSTEM 03-49
WATER FLOW REGULATOR VALVE 03-50
FUNCTION OF THE COOLING SYSTEM 03-53
IGNITION SYSTEMS 03-58
SPARK PLUG INFORMATION 03-66
MIKUNI BN CARBURETORS 03-68
RACING ENGINE PREPARATION SUMMARY 03-78
USING A RADAR GUN FOR TUNING 03-80

SECTION 04 - PROPULSION SYSTEM

BASIC FUNCTIONS OF THE SYSTEM 04-2
PROPULSION SYSTEM ANALYSIS 04-2
VENTILATION (AIR LEAK) 04-3
CAVITATION 04-4
IMPELLER 04-4
IMPELLER APPLICATION CHART 04-7
IMPELLER SPECIFICATIONS AND BOOT APPLICATIONS 04-9
IMPELLER PITCH CHART 04-10
ENGINE/JET PUMP ALIGNMENT 04-11
FUNCTIONS OF THE VARIABLE TRIM SYSTEM (VTS) 04-12
PROPULSION SYSTEM MAINTENANCE 04-13

SECTION 05 - MISCELLANEOUS

EQUIVALENT WEIGHTS AND MEASURES CHART 05-2
GLOSSARY OF TERMS IN PERSONNAL WATERCRAFT RACING 05-3
FLAGS 05-4
RACER'S LOG 05-5
AFTERMARKET MANUFACTURERS 05-6

SAFETY

PLEASE READ AND UNDERSTAND ALL WARNINGS AND CAUTIONS IN THIS HANDBOOK.

This handbook uses the following symbols.

◆ WARNING

Identifies an instruction which, if not followed, could cause serious personal injuries including possibility of death.

▼ CAUTION

Denotes an instruction which, if not followed, could severely damage watercraft components.

NOTE: Indicates supplementary information needed to fully complete an instruction.

Prior to operating the watercraft, thoroughly read and understand the *Sea-Doo Operator's Guide* and *Safety Handbook*, it will give necessary knowledge required to adequately operate your watercraft.

Check local and federal boating laws and regulations in the area where the watercraft is to be used. It is recommended to complete a boating safety course.

Never operate the watercraft after consuming alcohol and/or drugs.

At race events, always respect rules legislated by the organizer and sanctioning association.

KEEPING YOUR WATERCRAFT LEGAL AND WITHIN THE RULES IS YOUR RESPONSIBILITY.

RACE SANCTIONING ASSOCIATIONS

This handbook was written to help in the preparation of a Sea-Doo watercraft for competitive events.

Carefully study the association rule book and class of racing you intend to compete in before making any modifications to your watercraft. Your watercraft must conform to association specifications.

The IJSBA is the sanctioning association for the United States. You can contact them at the address listed below. The IJSBA will also be able to provide you with the contact information for the affiliate association in your country, as well as promoters in your region.

A membership in the association sanctioning the event is mandatory before competing in a race.

I.J.S.B.A.

INTERNATIONAL JET SPORTS BOATING ASSOCIATION

1239 EAST WARNER AVENUE
SANTA ANA, CA 92705

PHONE: (714) 751-4277
FAX: (714) 751-8418

TABLE OF CONTENTS

PREPARING FOR RACE DAY ACTIVITIES 01-2
PREPARING FOR A SAFETY INSPECTION 01-5
PRERACE MAINTENANCE 01-6
MAINTENANCE BETWEEN RACES 01-7
EQUIPMENT AND SPARE PARTS TO BRING TO THE RACE 01-8
PIT AREA PRESENTATION 01-8
INTERACTION WITH RACE OFFICIALS 01-9
SPONSORSHIP AND SOLICITATION 01-10
THE PROFESSIONALS POINT OF VIEW 01-11

PREPARING FOR RACE DAY ACTIVITIES

1. Joining the Sanctioning Body

All legitimate races are conducted under the guidance of a given sanctioning body. The most common being the IJSBA. The sanctioning body requires the promoter to meet safety standards and provide adequate insurance coverage for the event. You should purchase a rule book from them, or join the sanctioning body and receive a free rule book, well before you go racing. Study the rule book, learn the procedures and requirements. The rule book will give you strict guidelines as to what is allowed to be done to your watercraft for racing within a particular class. You can not make modifications that are not specifically outlined in the rule book. Keep a copy of the rule book in your tool box for reference. The phone number and address of the IJSBA is on page VI of this manual. Call or write, and they will send you an entry form.

You must however, be 15 years old to join. If you are under 18 you must request a parental release form that must be signed and notarized by your parent or guardian. Entry forms for every race must be signed by your parent or guardian

2. Registration

Registration for a race should be done by mail several weeks before the event. This is the procedure preferred by the race promoter. However, most promoters, not all, will also hold late registration the night before or the morning of the race. Those who choose late registration are charged a penalty fee for that privilege.

During registration, you will have to indicate on the entry form the type of event and classes you have chosen to enter. Also at that time, your holder will need to sign a release form.

3. Required Safety Equipment

A U.S. Coast Guard approved Type I or Type III Personal Floatation Device (PFD) in sound condition must be worn by all competitors at all times when on the water. A properly fitting, full-coverage helmet with chin and mouth protection (face shield removed) that meets current Department of Transportation or current Snell Foundation standards must be worn by all competitors at all times when on the water except during free style competition. All helmets must be in sound condition and must be approved at the technical inspection. No plastic bicycle, BMX, or similarly designed headgear will be allowed.

Back protection, protective footwear, and eye protection are recommended, but not required, for riders in competition events.

You may also be required to have a dry chemical fire extinguisher in your pit area.

4. Pit Area Setup

At the race site you will be allowed to setup your pit area the morning of the event at approximately 6:00 a.m. Pit location is very important, be there early. You will have to place your watercraft close to the water line, your equipment and tent if you have one must be placed little further away, keep tidal fluctuations in mind. The promoter may not be on hand during your setup. Look the site over the night before, if possible talk to the promoter to find out where to set up; by doing this, you will avoid moving all your equipment later and you will be able to get a choice spot with easy access to the water, as well as to your equipment. You are also required to keep a fire extinguisher in your pit and store your fuel in a designated area.

5. Safety Inspection

Before your watercraft is allowed on the water, the Safety Inspector, or his assistant, must perform a safety inspection.

The Inspector will check your full face helmet and your personal flotation device for compliance with sanctioning requirements. At that time your watercraft will be checked for safety requirements which are defined in your rule book, and then affix a sticker to your watercraft which signifies your compliance. After inspection you will be ready for practice, but remember, most promoters do not allow practice or free riding until after the rider's meeting. Failure to comply can mean disqualification or a fine.

During safety inspection, ask the Inspector what type of fuel tests are going to be made (if any). Have your fuel tested at this time. Fuel from filling stations sometimes have alcohol added and may not test legal. Now is the time to find out and change fuel if necessary.

6. Rider's Meeting

The rider's meeting is mandatory for racers. In many cases a roll call is held to ensure attendance. Failure to attend can be grounds for disqualification or a fine. During rider meetings the Promoter will discuss particular requirements for the day's events, including; practice order, course layout, starting procedures, number of laps, emergency rescue, technical inspections, and award presentation. If you have any questions or concerns, this is the time they should be discussed.

7. Practice

Practice is for the purpose of learning the course. Red buoys signify left turns while yellow buoys are for right turns. Be on the line ready to go when your class is called. Do not race during practice. You may injure yourself or damage your boat. Many racers have been taken out during practice because of stupidity. Don't join their ranks. Remember, learn the course, don't tune your watercraft during practice. If your boat needs tuning it is due to poor preparation on your part. Go to a designated free riding area so that you can devote your thought to tuning and not negotiating the course or another rider.

8. Race and Result Posting

The pit board will be posted before practice or shortly afterward. Now is the time to make sure you have been placed in the correct class and that your boat number is listed correctly. If you find any discrepancies see the Chief Scorer or Race Director immediately. Write down the race number that you are in, note the designated number of finishing boats that transfer to the final event. All transfer positions must report to tech inspection after the race. If you do not transfer during your heat race, then you will be placed in the LCQ (Last Chance Qualifier) race. In the LCQ only the top 1 or 2 riders will transfer. Know what the cut off point is for transfer positions and what race number the LCQ is. In some cases heat races will not be necessary due to a low rider turnout for your class. In the event that this is the case, you will normally run 2 races called "motos". You will be scored on each race and the combined totals will be your overall score. Details on points awarded, and calculation of points to determine the overall winner are detailed in the rule book. After your race, the official results for your race will be posted within 15 minutes. If there is a mistake see the Chief Scorer or Race Director at this time.

9. Staging for the Race

When you come to the line for your race you will be lined up on the starting line. This is called staging. You will be lined up in 1 of 3 ways:

1. You will draw for your position.
2. The computer will line you up randomly as posted on the pit board.
3. You will be lined up in order of your finish position from your previous qualifier or heat race.

10. Starting

Once in position on the line you will be allowed 1 or 2 holders to keep your boat in position safely. The holders will hold back your boat while the engine is running just before the rubber band is snapped. It is important that you practice your starts with your holders. Holders need to learn how to hold on to your boat while you increase the throttle. Holders must be synchronized with you and the Starter. Many races are won or lost by your holders ability to get you off to a good start. Holders must use gloves to do a good job.

Starting procedures at your event will be discussed during the riders meeting. However, the best way to get the edge is for you and your holders to watch the Flag Man and Starter on the races prior to yours. Watching them will allow you to see the rhythm or pattern they are using for the start. This can give you the edge.

It is very important to remember that if you jump the start you will be severely penalized. You will have to start with a dead engine, your teather in your hand and only 1 holder, or no holder to keep you in position.

While the "2" card is being displayed by the starter, the rider has the opportunity to call a "2 minute hold" in the event they are experiencing difficulties on the starting line, for example, a sparkplug fouling or the inability to get the engine started. At this point the starter will allow the rider 2 minutes to correct the problem. Once the "1" card is displayed a "2 minute hold" can not be called. When the "1" card is turned sideways the race will begin within 0-5 seconds when the rubber band is released. Only one "2 minute hold" is allowed per start.

11. Racing

Upon the start, hold your line until the first turn buoy. If you cut across in front of other riders you will be placed 1 lap down or black flagged. In lieu of a black flag, the race may be red flagged and you will be required to start with a dead engine and your tether in you hand. This does not mean you can not change lines. If you have a definite lead on another boat, and you will not endanger them, you can move in. Getting around the first turn buoy in good position is very important. If you are in back of the pack you will have a lot of trouble getting around the other boats before you finish.

In many cases a rider has been 2nd or 3rd to the first turn buoy and lost position because of water spray blinding their vision. Use race goggles at least for the first few buoys. You can duct tape the strap to the back of your helmet so you don't lose them when you pull them off.

Race smart. Stay close to your competitor and capitalize on their mistakes. Know the course.

Many times the leader has taken the wrong path with other riders following, just to have a slower rider negotiate the course correctly and win.

Be sure you race to the checkered flag. Many races have been lost because the rider thought the white flag was waved then stopped on the next lap. Flag men make mistakes. Race to the checkered flag, not 1 lap past the white. Always race past the start/finish line and between the 2 finish line buoys. Many Expert and Pro racers on the IJSBA National Tour have gone outside the finish line buoy during the race or at the finish, only to be penalized one lap. Racers with big leads have actually come to the finish line, slowed down and turned directly into the technical inspection area without crossing the finish line. Others have been passed because they slowed down. Race past the finish line, continue around the course as not to interfere with slower riders still finishing the race. Never turn and go against the flow of traffic after you have finished the race, even if you are going to tech. Continue around the course to get back.

12. Technical Inspection

After your qualifying race or moto you will be required to go to Technical Inspection if you have placed in a transfer position. On your first trip to tech, the Technical Inspector will record your hull number. The hull number is located below the bond flange on the right rear of the hull. The purpose of recording your hull number is to insure that you will be running the same boat in the final that you have qualified for or in your second moto.

On a Sea-Doo, the number is imprinted in the fiberglass or on a black tag with a series of dots forming letters and numbers. This number can be extremely hard to read, especially in the water. To make reading easier, paint over the numbers with white paint. After the paint dries lightly use steel wool or very fine sandpaper to take the paint off of the hull. This procedure will leave the paint in the dots which now can be easily read. At some races the inspector will place a special sticker with a serial number on the rear of the hull for easier reading.

After your hull number is recorded, the inspector may make a series of visual inspections inside and outside the hull to verify class legality or to see if safety requirements have been met. The inspector may use a paint type seal on various areas of the engine to prevent a rider from going into the engine and removing illegal parts that may have been used for qualifying. If, after the race, something goes wrong which requires you to break a seal to perform service, take your boat to the inspector before breaking the seal. You will then be able to perform repairs at tech. This will allow the inspector to check the parts coming out for legality, and he will be able to apply a new seal upon completion.

After your final moto, you will then return to tech for verification of hull and seal authenticity. At this time the inspector may require the top 3 finishers to disassemble various parts of the engine for close inspection. You and one mechanic will be allowed in tech to disassemble the required items. You will not be reimbursed for any cost of gaskets, etc. If you refuse tear down you will be disqualified. In limited classes, usually the technical inspector has you remove the rotary valve housing in order to check for an illegal rotary valve. Also the head may have to be removed to check for porting in limited classes, or bore and stroke measurements for displacement limits in the modified class.

If you are using your boat in another racing class later that day, inform the inspector, he will have you come back after your last race. Don't forget to come back. The inspector keeps close notes and you will be disqualified if you do not return.

13. Emergency Rescue

During the race, several Course Marshals will be riding the course watching for missed buoys and fallen riders. In the event of an accident and you go down, wave your arm over your head if you are OK. Other riders can see you easier and the Course Marshal will pull you back to your boat.

If you are hurt, the Course Marshal will be in the water as soon as they reach you. At that time the race may be red flagged. The Course Marshals will then determine if a backboard is needed. Once they get you to shore, the EMT will take over and transport if necessary. Injuries requiring medical attention require an accident report be made to the promoter.

Always make sure that you have all your emergency information written down. Designate a member of your team to get this information to the EMT as soon as possible. The information sheet must contain your:

- full name
- address and phone number
- allergies
- blood type
- person to contact in an emergency and phone number
- insurance company
- social security number
- employer's name and phone number

PREPARING FOR A SAFETY INSPECTION

On race day you must have your watercraft safety inspected. The Technical Inspector will thoroughly check the watercraft for safety requirements. The requirements vary slightly from one sanctioning body to another. The IJSBA is the most stringent in their requirements. The following is a list of items the inspector will evaluate, if the race is sanctioned by the IJSBA.

1. Boat numbers and backgrounds must be of the correct size, color coordinated, and placed in the correct location on the watercraft. On Sea-Doo watercraft the numbers are required to be on the upper portion of the front deck, as close to the storage compartment as possible. This allows ease of visibility for the scoring staff. If the numbers can not be easily read you may be required to relocate them. The background and boat number colors are determined by your experience level:

   Novice: Black Numbers – Orange Background

   Expert: Black Numbers – Yellow Background

   Pro: Black Numbers – White Background

Your boat numbers must be at minimum 18 cm (7 in) high and must be spaced 13 mm (0.5 in) apart. Backgrounds must be 20 cm (8 in) high and 15-36 cm (6-14 in) wide, depending on the amount of numbers you run. Boat numbers will be assigned to you by the IJSBA, or in regional events, you will be allowed to choose your own number, providing the number has not already been selected by another rider. Check with the IJSBA or your regional promoter, prior to buying or painting numbers on your boat. Most promoters have backgrounds and numbers available for sale.

2. If your watercraft model is not equipped with a flush bow eyelet, it must be removed prior to inspection and racing. It is required that a length of nylon rope be used to replace the eyelet. The rope will facilitate easy towing off the course by the Course Marshals in the event of a breakdown and prevent water entry into the hull. When securing the rope ends inside the nose of the hull, the eyelet retaining plate must continue to be used in order to prevent the rope from pulling through.
3. The pump intake grate must have at least one bar running the length of the inlet and must not protrude down more than 12 mm (0.473 in) below the flat plane of the intake portion of the pump housing.
4. The ride plate must not contain any fin or rudder type protrusions, and aftermarket plates must stay within required dimensions.
5. The rubber bumpers must be in place and securely attached.
6. The hull and body must not have any sharp edges (torn or improperly repaired fiberglass).
7. Steering must turn from lock to lock without binding.
8. The handle bar grips must be secure.
9. Aftermarket handle bars that have a cross bar must have padding on the cross bar.
10. The fuel cap must fit tightly.
11. The throttle lever must work freely and spring back to the idle position.
12. The safety lanyard will be checked for proper operation.
13. The engine idle will be checked to determine that the engine will not idle in the event of lanyard failure.
14. Inside the hull the fuel tank, oil tank, and battery box will be checked for secure mounting.
15. All fuel lines must be secured to the carburetor and fuel tank with clamps or zip ties. Fuel injected engines must have approved high pressure fuel lines. There can be no fuel leaks of any type.
16. Flame arresters must be USCG approved and not modified.
17. Electrical components must be properly wired, insulated, and routed away from high temperature components.
18. Decals that are required to be placed on the boat by the sanctioning body, promoter, or sponsor will also be checked.
19. You will be required to show your USCG approved flotation device and approved full face helmet, without face shields, at this time.
20. The sponsons must not protrude beyond the width of the hull bond flange with the molding removed (see appendix in rule book). If it is such the case on your watercraft, it is necessary that the sponsons be filed or ground down to fit within the bond flange in order to be race legal.

NOTE: The inspector will place a small decal on your boat upon satisfactory completion of the inspection. If you are competing in a multi-day event, the inspection will be valid for the entire event.

PRERACE MAINTENANCE

The following items should always be checked when preparing for an upcoming race:

1. Check the engine compression. If the compression is low or the variance between cylinders is greater than 10 PSI, determine the cause and remedy the problem. Check the torque on the cylinder head bolts with a torque wrench using the proper tightening pattern. Put in new spark plugs.
2. Check the ignition timing and ignition flywheel nut torque.
3. Lubricate the electric starter gear and shaft. Check the starter mounting bolts for tightness and the starter electrical cable for a clean, corrosion free, connection, both on the starter and solenoid.

4. Check all rotary valve housing, intake manifold, and carburetor mounting bolts for tightness.
5. Check for correct oil injection pump adjustment, if an injection pump is being used.
6. Check the fuel filter for debris or water, if any abnormality is noticed, remove and clean the fuel tank, fuel filter, fuel lines, and carburetors.
7. Carburetor diaphragm screws should be checked and pop off pressure verified. Now is a good time to check your low and high speed fuel mixture screws to make sure they have not backed out and are still set to the required setting. Throttle cable operation should be checked to insure maximum throttle opening is being attained. Lubricate the throttle cable at this time.
8. Clean or replace the flame arrester as necessary.
9. Engine bed plate bolts should be checked for tightness.
10. Check all exhaust system components for cracks or signs of fatigue. Pay close attention to rubber couplers, exhaust pipe, and exhaust manifold mounting bolts.
11. Service the battery and check for clean, corrosion free, battery cable connections, make sure the battery is fully charged.
12. Grease the PTO flywheel and the drive shaft seal carrier (if applicable) at their grease fittings. If the seal is damaged replace it.
13. Check the hull and deck for signs of cracking, or damage. If the bottom of the hull has been damaged or scraped, repair should be made to restore the configuration to it's original shape.
14. The impeller housing should be removed to allow for a close inspection of the jet pump and related parts. Impeller clearance, stator vane, and general pump condition should also be checked. Remove the drive shaft and inspect the splines. Check for correct engine to pump alignment. Grease all necessary components during reassembly. Lubricate the steering stem, steering support and cables. Upon completion, check for proper steering cable and trim cable adjustments.

NOTE: Poor engine to jet pump alignment will cause excessive vibration and loss of horsepower!

15. Check the intake grate for damage and tightness.
16. Verify that all gauges are functioning correctly.
17. Test ride the watercraft and perform any adjustments before leaving for the race site.
18. Flush the cooling system to insure cleanliness and maximum cooling system efficiency.
19. Make sure that all fuel lines are zip tied or clamped and all water lines are clamped tightly.

MAINTENANCE BETWEEN RACES

The following items should be checked between races:

1. Remove the spark plugs and check their condition, change if necessary.
2. Check the exhaust system for leaks and tightness.
3. Check throttle operation, make sure full throttle is being attained.
4. Visually inspect all inner hull components for secure mounting and proper operation.
5. Adjust fuel and oil levels as needed.
6. Visually inspect the hull for external damage or punctures, repair as necessary.

NOTE: Irreparable hull damage, which occurs during a race, is the only reason a racer is allowed to run a different boat in a race than that which they have already qualified for. The Technical Inspector must make the determination. You may not run a different boat if you have suffered mechanical damage.

7. Check the intake grate for damage and secure mounting.
8. Inspect the jet pump for rocks or debris that may have been lodged inside.
9. Check the operation of the steering components and adjust or tighten as necessary.

EQUIPMENT AND SPARE PARTS TO BRING TO THE RACE

Racers must be prepared for any situations that may arise on race day. However, most racers do not have the resources required to attain, or to transport all the equipment necessary to cover all possible situations. You will have to determine what your capabilities are for the level of racing you are at (Pro, Expert, Novice) and just how important winning a race is to you.

Serious racers normally have 2 boats of equal capabilities. If a problem is encountered on one boat, before it is qualified for an event, the backup boat is used. If the boat has already been qualified for a race, the parts are taken from the backup boat, then used to repair the qualified boat. These racers normally bring extra parts as well.

All racers should be equipped with the *Shop Manual* for their watercraft. They should have at minimum the necessary tools to accomplish the service procedures that they are capable of performing themselves.

The following is a list of parts and equipment that are recommended for you to have on hand for quick repair when needed:

1. Spark plugs.
2. A complete gasket and O-ring set.
3. Two sets of piston rings.
4. Two flywheel keys.
5. Extra exhaust couplers.
6. A roll of fuel and water line.
7. A throttle and steering cable.
8. A fuel filter.
9. A carburetor rebuild kit.
10. A starter motor.
11. An ignition coil and Multi-Purpose Electronic Module.
12. A fully charged battery and jumper cables.
13. Quick drying epoxy or fiberglass repair kit.
14. Various size hose clamps.
15. Locking ties of assorted sizes.
16. Safety wire.
17. Duct tape and electrical tape.
18. Waterproof silicone sealer.
19. Assorted nuts and bolts.
20. A grease gun with grease.

PIT AREA PRESENTATION

Your pit area is of major importance in many ways. Race teams that are well financed actually pay the promoters to place large tents, with sponsor names on them, at the most advantageous locations on the beach. This allows them greater media exposure by film crews, and easy access to the water for their racers.

For these same reasons, and more, your pit location is just as important.

Your choice for pit location should be based on the following factors. Weigh these factors in your mind and make the best possible choice given the circumstances.

1. You need to set up where you will receive the greatest amount of exposure to the spectators, media, and well financed race teams. You need to be recognized for your professional appearance, your attention to small details, and your finishing position by all of these people. Setting up next to large race teams will allow you to watch and learn from them. When people come to see these teams, they will also see you.
2. You must be able to get your boat to and from the pit area between races. This will allow you to service the boat with easy access to your tools. In some cases this is not possible because the race site will not allow for it.
3. Set up where other racers do not have to go through your pit to get to their boat or the water.

Your pit area is a reflection on your sponsors as well as yourself. You should invest in a tent for your pit as soon as you can afford one. Always anchor your tent, and do not leave it up over night, unless it is very secure. The tent should be attractive and of a light color to be cooler. A section of indoor/outdoor carpet to set your watercraft stand and tool box on can help add a professional appearance.

Many racers hang banners of sponsors on their tents to advertise their sponsors. This can add appeal to your area, assuming you don't clutter the tent with too many banners. Some racers have designed a small billboard and placed it next to their tent. The sponsors names have been placed on the billboard with custom paint or decals. The billboard can also be arranged to prevent easy access to, or through, your pit. Some sponsors may be providing you with very generous support. You might want to design something special for them. Sponsors are always looking for new and innovative ways to advertise, if you can provide that "something different" it will not only help you keep a sponsor, but other sponsors will recognize your work and may throw support your way.

Keep your pit area clean, bring a small waste can for your pit, (it's another place to put decals) it adds to the professional look. You are required to have a fire extinguisher in your pit. Do not set it on the ground, it will be hard to locate in the event of an emergency. Attach a hanger to one tent post and place the extinguisher on it. Your fuel container should be of high quality, red in color, (a requirement, not normally enforced by the promoter), and stored away from smoking areas.

There should be no horse play in your pit area, again, your conduct, and that of others with you, is a direct reflection on your professionalism. Do not loose your temper, act like a child, or allow yourself and those with you to use profane language, under any circumstance.

INTERACTION WITH RACE OFFICIALS

There are many officials that you will come in contact with during race day. These officials have specific duties required of them, all of which play a part in how efficiently the race is conducted. Always treat the officials with respect. Never raise your voice, use profane language, or make rude gestures to officials. You can always discuss your differences without loosing your cool. Being loud and obnoxious will not change the officials mind on a decision, but it can sway his opinion on future matters, normally against you! Treat all officials courteously, it will pay off in the long run.

The person in charge of the officials is the Race Director. The Race Director orchestrates all activities on race day. If you have a problem with a judgement made by an official, and you cannot come to an equitable solution, see the Race Director. The Race Director is in charge of settling disputes. The Race Director's calls are final at the race site. If you feel the wrong decision was made, you can file a written protest to the Race Committee of the sanctioning body, under which the race was conducted. Normally, the protest must be accompanied with a protest fee. If it becomes necessary, follow the procedures outlined in your rule book for filing an official protest. There has been documented cases where the Race Committee has reversed the decision of the Race Director, however, it is rare.

The most common problems which arise between racers and officials occur at the start of the race. Racers jump the start, and then the race is red flagged, or the rider and their holders are unhappy because they feel a red flag should have been thrown, but was not. Because of these problems being most common, it is recommended that you watch the start of the races preceding yours whenever possible. Determine the type of calls the Starter is making and use the information to your advantage. When problems arise, and the call is made against you, respond professionally. If you believe that the call made by the Starting Official was incorrect, talk to the Race Director. The Race Director's decision is final in these matters.

The second most common problem occurs during a race because a racer misses a buoy and no officials witnessed the incident, or the racer was called for a missed buoy and the racer believes they did not miss the buoy. When missed buoys are not seen by a race official, then the call against the racer in question cannot be made, even when the error was captured on video tape. Video tape evidence is not permissible by any sanctioning body. If you feel that the call made against you was invalid, consult the Race Director. The Director will consult with the official making the call against you. If that official wishes to retract the call on the buoy in question, the decision will be reversed. The Director will not reverse an officials call, unless the Director witnessed the situation personally.

While there are many examples of differences between officials and racers, most can be solved without bringing the Race Director into the conversation. An example of this would be a scoring error. When a discrepancy arises in scoring that places you further back in the race than you thought was correct, see the Chief Scorer. The Chief Scorer will recheck the lap charts to determine if an error was made. If no error is found, the Scorer can explain to you how they arrived at the decision.

If your complaint concerns the legality of a given watercraft's modification, go to the Technical Inspector. The Inspector knows the modification rules better than any other official, it's their job. If you believe that a boat is illegal, tell the Inspector. If the item can be visually inspected without any tear down, the Inspector will normally keep an eye open for the infraction. If the infraction requires engine or pump tear down, it would then be your responsibility to lodge a formal protest. The protest must be in writing to the Race Director. The protest must be specific, not general in scope. For example; you may protest the fuel induction system, ignition system, or crankshaft, but, you could not protest the entire engine as a whole unit. Each item protested must be accompanied with a protest, and an additional fee to cover tear down. The fee is determined by the Technical Director and Race Director. You are allowed only a short time period to file the protest after the race concludes. Check your rule book for specific details.

Remember, officials can make mistakes, but so can racers.

When problems arise, conduct yourself in a professional manner. Attempt to locate and deal with the official that handles that aspect of the race. If you don't get satisfaction, then it's time to take your problem to the Race Director. The outcome may not always be to your liking, but if you handle yourself professionally the Race Director will be more open to your comments, and in the future will place more validity on your side of the argument.

SPONSORSHIP AND SOLICITATION

There are many levels of sponsorship available to racers. The amount of sponsorship you receive is primarily dependent on your national ranking and experience level (novice/expert/pro). There are many novice and expert racers with much greater sponsorship support than some pro racers. The reason is, that they made a commitment to their racing program. They practiced hard, stayed in shape, and made sure their machines were always race ready. Because of this, they won races, received media coverage, and gained recognition.

Recognition is what sponsorship is all about. Racers seek sponsorship to help offset the cost of racing, while sponsors support you for one purpose, recognition of their product. Your winning races promotes their products and exposes them to a large target population group. The sponsor hopes this will enhance their image and sales.

As a novice, expert, or first year pro, the type of sponsorship support you can expect will normally be very limited unless you're the best in your class. When you're national number one sponsors will be at your door step, however, in the mean time you must actively seek support in every possible way. Many large companies have solicited marketing specialists to research and determine the feasibility of racer sponsorship, while most smaller or local businesses have not. On a regional level these smaller businesses may not even realize the potential for product recognition that watercraft racing can bring them. Go after these sponsors, invite them to a regional race so that they can experience first hand the advertising opportunities available to them.

When making initial contact with a potential sponsor, attempt to set up an appointment to meet with them. Try to avoid discussing your proposal over the phone or by mail. Face to face meetings normally accomplish much more. Major sponsors will have representatives at the national events in your area. Call these people several weeks prior to the event and arrange a meeting with them during race weekend. In many instances personal meetings are impossible. When this is the case, contact the sponsor by phone and inform them that you will be sending your resume and sponsorship proposal to them for review. Close your conversation by setting a date to call again to discuss your proposal.

Your resume should begin with your personal information such as; name, age, address, marital status, schooling completed, occupation, etc. Next, you should list your future goals as a watercraft racer. This section should be concise and to the point. It should outline your short term and long term goals.

After your statement of goals, list all the races you have competed in, complete with your finishing positions and overall titles. Conclude your resume with a listing of your previous sponsors, their product line, and any major media coverage that you have received that would be advantageous for a sponsor to know.

The complexity of your sponsorship proposal will vary, quite noticeably, depending upon the level of racing at which you are competing. Racers who are competing in regional events, or are well back in the standings on the National Tour, are not able to get the "high dollar" support that requires an exhaustive detailed proposal. Most proposals should list the various levels of support that are available for the sponsor within your racing program. Each level of support should be followed by a statement of the service you will provide for that support.

There are many ways a sponsor can support your racing program and there are many services you can provide for that support.

Types of support can include:

1. Products such as; racing equipment for your boat, racing apparel, safety equipment, or transport equipment (trailers-totes).
2. Services including; repair work or modifications to your engine, hull, jet pump, or paint jobs for your boat and trailer.
3. Cash for entry fees, and other types of expenses.

The services you can provide for this support is only limited to your imagination. Innovative, new ideas are what businesses are looking for. The better job you do for the sponsor the more support you can count on in the future.

Types of services can include:

1. Placing the product name on various racing equipment, such as your boat, truck, trailer, helmet, wet suit or tent. Different decal size or location can be dependent upon the amount of support received by the sponsor.
2. News releases can be sent out to the magazines and newspapers detailing your wins and sponsor support.
3. You can provide your sponsor with your trophy to be displayed in their place of business or office.
4. You can make personal appearances at their business, or fund raisers to sign autographs or to talk about the effectiveness of their products.

Your proposal must include a list of the races you will compete in for that season. The listing of races should include the date of each event, and detail the estimated rider and spectator turnout.

Racers competing on the National Tour, that are ranked in the top five in the world in their respective classes, seek an entirely different level of support than most racers. These racers normally receive support from the manufacturer of the watercraft they race. Some riders receive support directly from manufacturers race team directors, while others receive support from the manufacturer through factory race centers. These individuals have achieved the highest goals in racing through hard work and commitment to their racing program. They started out just like you, with the ambition to be the very best racer they could be. With hard work, preparation, and a little luck, you can do the same.

THE PROFESSIONALS POINT OF VIEW

Westcoast Performance Products Racing Team Manager, Tim Norton was asked, what does a Team Manager look for in the "Ideal Racer". This was his response:

When analyzing talent, Team Managers in today's motorsports world look at many attributes of a potential candidate. Because of those attributes, the decision making process can be complicated to score an overall picture of a rider's talents.

There are times when you have to look at all of the attributes and compare them to your specific needs in a rider, and there are times when you just go with your "gut" feeling. I view talent as an automatic criteria.

You must have it before we even look. No talent, no consideration. So assuming your past that stage, we next turn to another key item, which is attitude.

The right attitude can propel talent to the next level or stop it dead in it's tracks. We like riders who view every test as a challenge, and every race as a new goal to strive for.

Our riders are never larger than the support staff, and by acting that way, always win the admiration of the race team crew. A successful rider with the right attitude, can convince his/her crew to go into battle with them every time his race boat is fired up. Remember, this is a team effort.

Next, a successful rider always has inner drive. This is required to push through those tough times. A DNF, a lapped rider, or a bad start can break even the strongest spirit, but having a strong will to perceiver and overcome, is needed to rebound in the event that luck isn't always looking your way.

Additionally, focus is also a key. We look for riders who have started at a given point, and attacked the class at hand. They continually improve until they become champion, and then move on to the next goal, regardless of what level they start at.

Finally, once you have shown you have the above mentioned skills, we look at your people skills. We definitely want riders who genuinely like to be around other people. The team is in the promotions business, and a major part of being a team rider is the ability to impress people on and off the track.

Being a factory team rider is not for everyone. But if you have "what it takes" in the above mentioned areas, you will be seriously considered to be a team rider.

Tim Norton
Team Manager,
Westcoast Performance Racing

Chris Fischetti and Kelly Kurpil are two of the top Professional Sea-Doo racers in the world. Each were asked to give their point of view concerning their racing careers.

Header: Chris Fischetti.

Being a Professional Racer is unlike any other occupation! Your job is not 8 to 5 with weekends off, it is a total full-time dedication. This means putting in 20 hours a day training, promoting, working on your equipment, then racing and having all this come together to win the race.

Winning the race is always the top priority, but having the ability to promote your sponsors makes you even more valuable to them. Your job off the track is as important for the image of your sponsors as it is to yourself. Thus your day does not end as soon as the race is over.

Being a champion watercraft racer also entails being very strong and in great physical shape. It takes a lot out of you to race a 60 plus MPH watercraft around the track with 13 other guys wanting to get pass you. Physical cross training has made me stronger and given me an advantage. Every advantage on the track, even a small one can give big results at the end of the race.

Our sport is now, in what I think to be, still in the developmental stage. Because of this, testing your PWC is very, very important if you want to win. My testing schedule is always an on going task of trial and error. But my Sea-Doo is always out front at the races.

The last thing is putting the above combinations all together on race day. With good anticipation, a little luck, and all the right preparation you will have a successful day at the races or as for me and Sea-Doo, a couple of National titles and an overall World Championship.

Chris "The Flying Fish" Fischetti
1996 IJSBA Pro Runabout 785 National Champion
1996 IJSBA Pro Runabout 785 World Champion

Header: Kelly Kurpil.

As a Pro Runabout racer each day of training, testing and racing has taught me more. Conditioning has become a big part of my daily routine. I learned early on while racing in the Modified Division against the men, that physical strength plays a major role in being competitive. Each day I include a weight training program with my personal trainer for strength and stamina. Weight training has given me the strength I need to compete on a professional level. I use this training to my advantage to improve my endurance and cornering skills. This type of conditioning has taught me dedication, motivation, responsibility and self control. The lessons I have learned have helped me sharpen the skills I need to be a competitive racer.

Racing may not be for everyone because of the commitment involved. But for me, I feel racing brings out the best in me and builds physical endurance. I knew at my first race as a novice when the rubberband snapped, that my life would never be the same again. It takes a special individual to pursue an avenue of contrast excitement and disappointment. However, that's what racings all about.

Being a Pro Runabout racer is a big responsibility. Racing impacts every part of your life. I feel (as does Sea-Doo) that the image I project to others must be positive. This includes safety, responsibility, and attitude both on and off the race course. You must always be a positive role model.

While racing, fear can not be in your vocabulary and challenge you accept on a one to one basis. Your striving each day to improve upon the talents that people may think comes naturally.

My commitment and conditioning to be a Pro Runabout racer has put me up front in my class. A class that many people dare not adventure, for fear of where it may or may not lead them. Take the challenge, it may bring out the best in you.

Kelly Kurpil
1996 IJSBA Pro Woman Runabout National Champion

TABLE OF CONTENTS

PREPARING THE HULL FOR INSPECTION 02-2
MEASURING THE HULL 02-2
TRUING THE HULL 02-2
PAINTING 02-3
CONCEPT™ PAINTING PROCEDURE 02-3
DELTA™ PAINTING PROCEDURE 02-4
SEA-DOO PAINT CODES 02-5
STORAGE COVER PAINT CODES 02-6
ENGINE PAINT CODES 02-6
EXHAUST SYSTEM PAINT CODES 02-6
MODELS WITH CORRESPONDING BODY/HULL PAINT CODES 02-6
SEALING OF BODY COMPONENTS 02-8
HULL AND BODY MAINTENANCE TIPS 02-8
LIGHTWEIGHT PARTS 02-8
SPONSON KITS 02-8

PREPARING THE HULL FOR INSPECTION

The production hulls produced by Sea-Doo are manufactured to fine tolerances. All riders can benefit from truing the hulls. Hull truing becomes most beneficial on watercraft equipped with highly tuned modified engines. Exacting tolerances are necessary to attain proper high speed stability.

The section of the hull where truing is most important is from the rear of the hull to a point approximately 1.5 m (60 in) forward. This is due to the fact that at high speeds only the rear section of the hull is in contact with the water. You can not alter the hull configuration more than 2 mm (0.079 in) in any direction if you are racing in Limited or Superstock Class, otherwise your modification will be illegal.

NOTE: The hull bond flange can not be altered in length or width even in the modified classes. Doing so is considered an illegal modification by all sanctioning bodies.

The following steps must be observed before turning the watercraft upside down.

– remove seat
– remove battery
– remove engine and jet pump
– siphon fuel and oil from tanks

NOTE: Refer to appropriate model year *Shop Manual* for proper removal and installation procedures.

MEASURING THE HULL

A straight edge should be used to measure the condition of the hull bottom surface. Place straight edge on its most rigid side along the bottom of the hull. Identify the low and high spots on the surface as shown below.

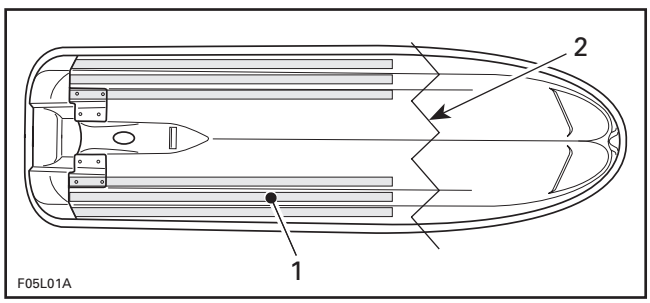

1. Place straight edge at different locations as shown by shadow areas
2. Not necessary to true beyond this point

TRUING THE HULL

Truing the hull means to make the hull as straight as possible. This will help you gain maximum performance and top speed. Follow these steps and you will produce a good racing hull. Special tools and materials may be required to perform this work.

Required Tools and Materials

– pneumatic long sander
– long flat sander (long board)
– dual action sander
– sandpaper
– epoxy fairing compound (found at marine supply store)
– filler spreader
– long straight edge

NOTE: It is not recommended to use bondo or auto body filler as it is less durable and can absorb water. A compound with fiberglass particles in it will be very hard to sand flat and true if proper techniques are not observed.

Procedure

a. Remove intake grate.
b. Mask off body and ride plate. Accurately place masking tape down in seam where ride plate meets relief in hull.
c. Carefully sand each section by hand using the long board sander. This will help to indicate the low/high spots along the hull surface. Be careful not to remove excess material.

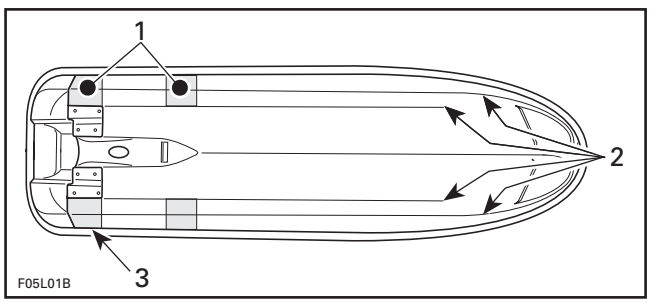

TYPICAL

1. Shadow areas indicate possible high spots
2. Strakes
3. Corner to be reinforced

d. Using the dual action sander, sand the low spots just enough to rough up the gelcoat. These low spots are indicated where gelcoat hasn't been sanded with the long board. This is done so that fairing compound will adhere.
e. Measure the low area and mix up enough filler material to fill the area in. Follow the manufacturers mixing instructions. Fill low area and blend in evenly with bondo spreader. Try to leave your filler a little high so you have material to sand. Allow proper curing time.
f. Using the pneumatic long sander, sand the area until you accomplish a flat surface. Remember to finish edges, radius and flat sections of strakes as well. Using the straight edge, check the area which was just finished. Verify flatness and if the area still has a low spot, start your filling steps again.
g. At the rear of the watercraft, where the transom meets the hull, there is a radius (approximately 4 mm) that should be covered with epoxy fairing compound and sanded to a square edge.
h. For refinish, we recommend using PPG products. PPG high build K-36 primer can be used for fine finishing small hull irregularities after application of fairing compound.

PAINTING

General

The following was prepared in conjunction with PPG Industries Inc. It contains 2 painting procedures, CONCEPT™ the most commonly used, and DELTA™ (with low VOC) mainly used in California.

If more information is needed, contact a PPG dealer or a Sea-Doo watercraft authorized dealer.

CONCEPT™ PAINTING PROCEDURE

For additional information refer to *PPG P-Bulletin* no.168.

Surface Preparation

Prepare and clean surface consistent with good painting practices.

Primer

DP Epoxy Primer/DP 401 Catalyst; DX 1791/1792 (prime before topcoating).

Primer Surfacer

K36/K201, K200/K201 or DZ KONDAR® Primer Surfacers.

NOTE: KONDAR® must be sealed before applying CONCEPT color.

Sealer

KTS30 2K Sealer, DP Epoxy Primer reduced as a sealer or DAS 1980 or DAS 1987.

Direct Gloss Color

How to Mix

Standard Air Dry: Mix CONCEPT Color 2:1:1 – 2 parts color with 1 part DT Reducer best suited to shop temperatures and 1 part DU 4 below 29°C (85°F) or DU 5 above 29°C (85°F) Hardener.

Standard Force Dry: Mix CONCEPT Color 2:1:1 – Application temperatures below 29°C (85°F) use DU 5 Hardener, above 29°C (85°F) use DU 6.

Medium Solids (MS) Application: For faster film build, when using solid colors, mix 2 parts CONCEPT color with half part DT Reducer and 1 part DU 5 or DU 6 Hardener. Select the DT Reducer appropriate for shop temperature.

Pot Life

Pot Life of ready-to-spray CONCEPT color is 6 to 8 hours at 21°C (70°F). Medium solids option is 2 to 4 hours at 21°C (70°F).

Full Panel and Overall Repairs

Application

Apply 1 medium wet coat and give 5-10 minutes flash, followed by 2 wet coats with 15 minutes flash time between each coat. Adjust metallic on the last full wet coat. If necessary, apply a mist coat. For medium solids option apply 2 full wet coats.

Air Pressure

275-345 kPa (40-50 PSI) at the gun.

Dry Time

– dust free: 30 minutes
– tack free: 2 to 3 hours
– tape print free: 6 hours
– dry to handle: 6 to 8 hours at 21°C (70°F)
– force dry: 40 minutes at 60°C (140°F)

Faster dry times may be obtained by using 15 mL (1/2 oz) of DXR 81 Accelerator per sprayable 1.2 L (quart), however, the pot life is reduced to 2 hours.

Spot/Panel Repairs

Application

Spray medium wet coat of color on the repair area and allow 5-10 minutes flash time. Apply 2 additional full coats until hiding is achieved, extending each coat beyond the previous coat. Flash 15 minutes between each coat. For medium solids option apply 2 full wet coats.

Blending

Add DT 95 Reducer to a second gun cup. Reduce the fluid feed of the gun and lower the air pressure to 207 kPa (30 PSI). Dust the dry edge until a slight wet look appears, then stop. Or mix reduced and catalyzed color with equal parts of reduced and catalyzed CONCEPT DCU 2020 Clear.

DELTA™ PAINTING PROCEDURE

(With Low VOC, Mainly in California)

For additional information refer to *PPG P-Bulletin* no. 157.

Surface Preparation

Primer: DELTA™ PRIME PPU 166.

DELTA™ 2800, Color

How to Mix

Mix DELTA™ 2800 2:1, 2 parts colors to 1 DU 6 Catalyst.

Application

Apply 2 coats of DELTA™ Polyurethane Color. Apply the first coat at 1.5 – 1.8 wet mils. Allow a minimum of 15 minutes flash time prior to application of the second coat. Apply a second coat of DELTA™ using the same technique as the first application, paying strict attention to gun set up and proper equipment choices.

Recommended Spray Equipment

Gun Manufacturer	DeVilbiss	Binks	Graco	HVLP
Gun Model	JGA	62	800N	Can Am Model 900
Fluid Tip Size	FF 1.4 mm (.055 in)	63D 1.5 mm (.059 in)	02N 1.2 mm (.047 in)	HT no. 9072 2.5 mm (.098 in)
Air Cap	797/264	63PW	02/03	C9062
Gun Distance	26-30 cm (10-12 in)	26-30 cm (10-12 in)	26-30 cm (10-12 in)	26-30 cm (10-12 in)
Fluid Delivery	227-340 mL/mn (8-12 oz/mn)	227-340 mL/mn (8-12 oz/mn)	227-340 mL/mn (8-12 oz/mn)	227-340 mL/mn (8-12 oz/mn)
Air Pressure (At-the-Gun)	42-51 kPa (60-75 PSI)	42-51 kPa (60-75 PSI)	42-51 kPa (60-75 PSI)	62 kPa (9 PSI)

Dry Time (at 21°C (70°F))

- dust free: 25-35 minutes
- tack free: 2-1/2 – 3 hours
- tape/sand: Overnight

Force Dry

Allow 20 minutes purge time at 27-32°C (80-90°F) before bake. Bake 75 minutes at 65°C (150°F) or 40 minutes at 82°C (180°F). Allow to cool after force dry, before sanding or taping.

SEA-DOO PAINT CODES

BOMBARDIER		B.A.S.F. R-M	PPG	SPRAY PAINT P/N
B-176	VIPER RED		74790	
M-506	BRIGHT YELLOW (HULL)	RM-88152-9	88243	293 500 078
M-506	BRIGHT YELLOW (BODY)	RM-88152	88245	293 500 078
M-510	METALLIC FOREST GREEN	RM-88270	48023	
M-511	MARINE GREEN	RM-88032	48021	
M-512	DARK GREEN	RM-88636	48022	293 500 101
M-517	INDIGO BLUE	RM-88029	59814	293 500 102
M-519	METALLIC SILVER			
M-521	BRIGHT METALLIC PURPLE		59819	
5801-88-01	WHITE (1988-1991)		98192	
5801-88-01	WHITE (1992)		98208	
5801-88-01	WHITE (1993-1994)		98223	293 500 041
5801-88-01	SUPER WHITE (1995-1997)		98260	293 500 082
5801-88-02	YELLOW (1988-1989)		88207	293 500 008
5801-88-03	DARK GRAY		38248	
5801-88-04	BLACK		9551	
5803-90-01	YELLOW (1990-1991)		88207	293 500 008
5803-90-02	BLUE		17862	293 500 014
5804-91-01	BLUE		17861	293 500 073
5804-91-03	PURPLE		59962	293 500 042
5804-92-02	LAVENDER	DFM 88761	59974	293 500 059
5805-92-01	GRAY		38269	293 500 009
5806-93-01	LIGHT GRAY		38287	293 500 067
5806-93-02	TURQUOISE		19518	293 500 066
5810-90-02	MEDIUM GRAY		38247	293 500 040
5812-92-01	MAGENTA		59973	293 500 060
5812-92-08	WHITE		98209	293 500 029
5852-93-01	GREEN (HULL)		49580	293 500 062
5852-93-01	GREEN (STORAGE COVER)		49580	
5852-93-02	PURPLE		59962	293 500 020
5870-94-01	TEAL (HULL)		18923	293 500 063
5870-94-01	TEAL (STORAGE COVER)		18923	293 500 068
5870-94-02	RHODAMINE		78224	293 500 083

STORAGE COVER PAINT CODES

BRIGHT YELLOW	M-506
METALLIC FOREST GREEN	M-510
BRIGHT METALLIC PURPLE	M-521
BLUE	5804-91-01
LAVENDER	5804-92-02
MAGENTA	5812-92-01
TEAL	5870-94-01
GREEN	5852-93-01

ENGINE PAINT CODES

Engine	Color	Bombardier Paint Code
587	YELLOW	5801-88-02
587	YELLOW	5803-90-01
587	WHITE	5812-92-08
657	WHITE	5812-92-08
657X	WHITE	5812-92-08
717	WHITE	5812-92-08
787	WHITE	5812-92-08
947	WHITE	5812-92-08

EXHAUST SYSTEM PAINT CODES

WHITE	5812-92-08
PURPLE	5852-93-02
BLUE	5803-90-02
BLACK	5801-88-04
GRAY	5805-92-01

MODELS WITH CORRESPONDING BODY/HULL PAINT CODES

Model Name **1997**	Model Number	Body/Hull Bombardier Paint Code
SP	5879	5801-88-01
SPX	5834/5661	5801-88-01/M-506
GS	5621	5801-88-01
GSI	5622	5801-88-01
GSX	5625	5801-88-01/B-176
GSX LTD	5625	M-519/B-176
XP	5662	M-506
GTS	5818	5801-88-01
GTI	5641	5801-88-01
GTX	5642	5801-88-01/M-512
HX	5882	5801-88-01/M-506

Model Name **1996**	Model Number	Body/Hull Bombardier Paint Code
SP	5876	5801-88-01
SPX	5877	5801-88-01/M-511
SPI	5878	5801-88-01
XP	5858/5859	M-506
GSX	5620	5801-88-01/M-517
GTS	5817	5801-88-01
GTI	5865/5866	5801-88-01/M-506
GTX	5640	5801-88-01/M-512
HX	5881	5801-88-01/M-506

Model Name **1995**	Model Number	Body/Hull Bombardier Paint Code
SP	5873	5801-88-01
SPX	5874	5801-88-01/ 5870-94-01
SPI	5875	5801-88-01
XP 800	5856	M-506/5870-94-02
XP	5857	5801-88-01/M-506
GTS	5815/5816	5801-88-01
GTX	5863/5864	5801-88-01
HX	5880	5801-88-01/M-506

Model Name **1994**	Model Number	Body/Hull Bombardier Paint Code
SP	5870	5801-88-01
SPX	5871	5801-88-01/ 5870-94-01
SPI	5872	5801-88-01
XP	5854/5855	5801-88-01/ 5852-93-01
GTS	5814	5801-88-01
GTX	5862	5801-88-01

Model Name **1993**	Model Number	Body/Hull Bombardier Paint Code
SP	5806	5801-88-01/ 5806-93-01
SPX	5807	5801-88-01/ 5806-93-02
SPI	5808	5801-88-01/ 5806-93-01
XP	5852	5801-88-01/ 5852-93-01
GTS	5813	5801-88-01
GTX	5861	5801-88-01

Model Name **1992**	Model Number	Body/Hull Bombardier Paint Code
SP	5805	5801-88-01/ 5810-90-02
XP	5851	5801-88-01/ 5804-91-01
GTS	5812	5801-88-01
GTX	5860	5801-88-01

Model Name **1991**	Model Number	Body/Hull Bombardier Paint Code
SP	5804	5801-88-01/ 5810-90-02
XP	5850	5801-88-01/ 5804-91-01
GT	5811	5801-88-01 5810-90-02

Model Name **1990**	Model Number	Body/Hull Bombardier Paint Code
SP	5803	5801-88-01/ 5810-90-02
GT	5810	5801-88-01/ 5810-90-02

Model Name **1989**	Model Number	Body/Hull Bombardier Paint Code
SP	5802	5801-88-01/ 5801-88-03

Model Name **1988**	Model Number	Body/Hull Bombardier Paint Code
SP	5801	5801-88-01/ 5801-88-03

SEALING OF BODY COMPONENTS

Important areas to check: hull, storage compartment cover, water trap tank, drain hoses, seat seal and rear baffle. Reseal all leaks (refer to appropriate *Shop Manual*).

HULL AND BODY MAINTENANCE TIPS

To obtain a smooth hull after every use, wash watercraft with soap and water. This will remove residues which will slow your watercraft. Wax the hull periodically. When storing outdoors, keep your watercraft covered.

LIGHTWEIGHT PARTS

There are several aftermarket manufacturers which produce lighter weight and/or stronger parts for racing purposes such as seats and storage covers. These are worth considering. These light weight parts are illegal in the Limited Class. Be sure the parts you are installing are within the rules.

SPONSON KITS

Advantages of the Sponson

– improved handling

– reduces spin out. Holds better in corners

– more stability

NOTE: The sponsons on the Stock Sea-Doo watercraft protrude beyond the width of the hull bond flange. Because of this it is necessary that the sponsons be filed or ground down to fit within the bond flange in order to be race legal. The edges must be radiused to prevent a hazard to other riders.

There are long type sponsons and short type sponsons available in kits. They do work well when interchanged within the same type. It is only a matter of preference.

Available Kits:

Short Concave Sponsons

295 500 248	BLUE/PURPLE
295 500 194	GREEN
295 500 195	MAGENTA
295 500 329	BLACK

Short V-shaped Sponsons

295 500 249	ORANGE
295 500 168	GREEN
295 500 252	LIGHT GREY

Long Sponsons

295 500 254	GREY
295 500 330	BLACK

Installation Guidelines

The following pertain to all types of sponsons. The sponson holes location are given for short type. For long type, it is recommended to experiment to obtain what you require.

Minor adjustments in angle or height location of the sponson can have a tremendous effect on handling and speed. The position illustrated is a good starting point. Pro riders experiment with sponson design and location many times before they choose a position or design which is best suited for their riding style.

Experimenting with location of sponsons is time consuming but necessary. Sponsons that are angled with the front too far down will cause the rear of the watercraft to drag in the water. Sponsons angled with the front too far up will cause the nose of the watercraft to plow. You must find the position that works best for you. The one sponson position that keeps the pump in the water in corners without sliding out, while not creating excessive down force.

Sponsons, when attached must not exceed the width or length of the bond flange. The bond flange is considered the fiberglass joint under the rubber bumper, not the bumper. Most add-on long sponsons will require sanding on the base before attachment to prevent this from occurring.

Hole Location in Hull (Short Sponsons)

The vertical measurement must start from under the top edge of the hull. This will avoid mounting the sponson too low.

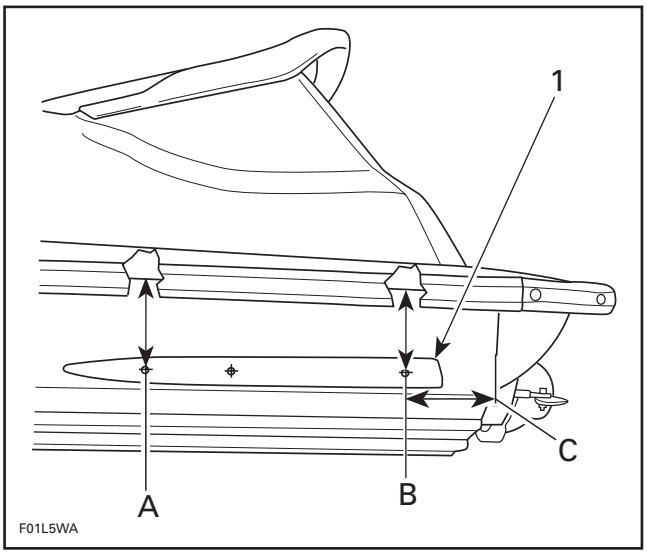

1. Template on hull
A. 100 mm (3-15/16 in) from hull flat surface
B. 89 mm (3-1/2 in) from hull flat surface
C. 115 mm (4-17/32 in) from center of radius

Be sure to verify stud location on your particular sponsons and compare to dimensions on diagram. Some minor adjustments may be necessary. Mark center of holes in gelcoat with an awl or center punch. When drilling holes in fiberglass start slowly with a light pressure on drill motor, as it is easy to drift off your locating point.

Urethane Foam Cutting

Cutting of the urethane foam can be accomplished by using a 35 mm (1-1/2 in) hole saw.

NOTE: The center drill bit must be removed from the hole saw.

Insert a pilot wire through the urethane foam.

Then, insert a 6 mm (1/4 in) steel rod through the urethane foam by hand.

From inside bilge, attach the hole saw to the steel rod. Refer to the following illustration.

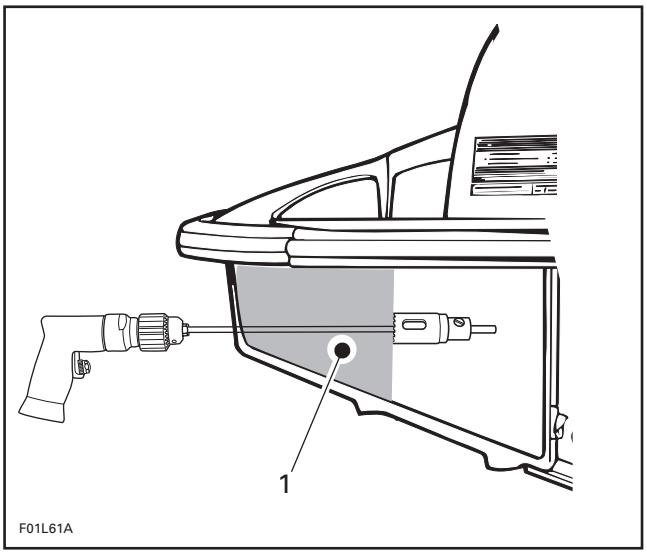

1. Urethane foam

Start cutting the urethane foam by carefully pulling hole saw into the foam and operating the drill in reverse position.

NOTE: Depending on hole saw depth, approximately 3 passes will be required to cut the urethane foam. Keep the first foam core. It will be reinstall once the job is completed.

▼ CAUTION

When cutting the last portion of urethane foam, carefully listen to the sound of the hole saw making contact with the side of the hull. Stop sawing immediately and remove the remaining foam by hand.

Sponson Installation

Place a generous bead of 732 multi-purpose sealant (P/N 293 800 006) along mating surface of sponson and around studs. This will help keep water from entering through attachment holes.

Insert sponson locating studs into corresponding holes inside of hull.

Install flat washers onto sponson studs using a flexible 4-claw pick-up tool (Snap-on YA837). Apply Loctite 242 to nuts prior to installation.

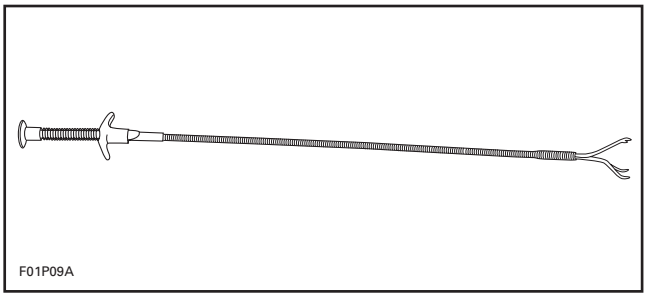

Install lock nuts by using the 4-claw pick-up tool or a 10 mm deep socket. Torque nuts to 14 N•m (10 lbf•ft).

Urethane Foam Reinstallation

When sponsons installation is completed, you can reinstall the first removed urethane foam core into each hole. Glue with 732 multi-purpose sealant (P/N 293 800 006).

TABLE OF CONTENTS

ENGINE TUNING CAUTIONS 03-2
BASIC ENGINE TERMINOLOGY 03-2
BASIC ENGINE COMPONENTS 03-3
ENGINE CONFIGURATION 03-7
BASIC ENGINE THEORY 03-8
COMBUSTION PROCESS 03-10
SQUISH AREA 03-13
COMBUSTION CHAMBER VOLUME MEASUREMENT 03-14
CALCULATING THE COMPRESSION RATIO 03-16
CALCULATING MACHINING CYLINDER HEAD HEIGHT VERSUS COMBUSTION CHAMBER VOLUME 03-17
OCTANE REQUIREMENTS FOR ROTAX ENGINES 03-17
RAVE VALVE OPERATION 03-17
FUNCTION OF THE ROTARY VALVE INTAKE SYSTEM 03-19
ROTARY VALVE TIMING 03-24
ROTARY VALVE IDENTIFICATION 03-26
CYLINDER PORTING MAPS 03-28
787 ENGINE MODIFICATIONS 03-32
947 ENGINE MODIFICATIONS 03-36
ENGINE LEAKAGE TEST 03-39
ENGINE LEAKAGE DIAGNOSTIC FLOW CHART 03-44
CRANKSHAFT INSPECTION 03-45
ENGINE BREAK-IN PROCEDURE 03-48
FUNCTION OF AN EXHAUST SYSTEM 03-49
WATER FLOW REGULATOR VALVE 03-50
FUNCTION OF THE COOLING SYSTEM 03-53
IGNITION SYSTEMS 03-58
SPARK PLUG INFORMATION 03-66
MIKUNI BN CARBURETORS 03-68
RACING ENGINE PREPARATION SUMMARY 03-78
USING A RADAR GUN FOR TUNING 03-80

ENGINE TUNING CAUTIONS

A few items to keep in mind when preparing your engine:

- There are specific set of rules for racing, know what those rules are!
- If your engine is operating at higher than stock RPM, the rev limiter must be changed accordingly. Never operate the engine without a rev limiter.
- Sloppy engine building will usually result in less power output and possible breakdowns.
- Follow the assembly and disassembly procedures outlined in the appropriate model year *Shop Manual*.

MODEL YEAR SHOP MANUAL	PART NUMBER
1989	295 000 060
1990	219 100 002
1991	219 100 004
1992	219 100 006
1993	219 100 008
1994	219 100 010
1995	219 100 013
1996	219 100 031
1997	219 100 048
1998	219 100 068

- Always use a laboratory blended fuel. Do not add your own octane booster. Doing so will result in unknown burning rates of the fuel. Select a fuel with a given octane rating and tune your engine to maximum efficiency for that fuel. (REFER TO OCTANE REQUIREMENTS FOR ROTAX ENGINES).
- Correct your carburetor jetting to compensate for engine modifications. Reconfirm correct jetting at the race site. Atmospheric conditions (ALTITUDE, TEMPERATURE, BAROMETRIC PRESSURE and HUMIDITY) may be quite different at the race site or during different times of the year.

Ignition timing may need to be altered from standard timing specifications to achieve maximum power output if modifications are made to the engine.

BASIC ENGINE TERMINOLOGY

Cycle:
In a combustion engine, a cycle is accomplished when the 4 phases; intake, compression, combustion and exhaust are complete. The cycle is complete in one revolution on a 2-stroke engine.

TDC:
Top Dead Center: The position of the piston when it reaches the upper limit of its travel inside the cylinder.
BTDC: Before Top Dead Center
ATDC: After Top Dead Center.

BDC:
Bottom Dead Center: The position of the piston when it reaches the lower limit of its travel inside the cylinder.
BBDC: Before Bottom Dead Center
ABDC: After Bottom Dead Center.

Bore:
Diameter of the cylinder.

Stroke:
The maximum movement of the piston from BDC to TDC It is characterized by 180° of crankshaft rotation.

Combustion Chamber:
Space between cylinder head and piston dome at TDC.

Displacement:
The volume of the cylinder displaced by the piston as it travels from TDC to BDC. The formula is:

$$\frac{\text{Bore}^2 \times \text{Stroke} \times \pi}{4} = \text{Volume (expressed in cc)}$$
(cc = cubic centimeters)

$\pi = 3.1416$

NOTE: To transfer cc to cubic inches, divide cc by 16.387.

Compression:
Reduction in volume or squeezing of a gas.

Theoretical Compression Ratio:

$$\frac{\text{Combustion Chamber Volume} + \text{Cylinder Volume}}{\text{Combustion Chamber Volume}} = \text{Theoretical Compression Ratio}$$

Corrected Compression Ratio:

$$\frac{\text{Combustion Chamber Volume} + \text{Cylinder* Volume}}{\text{Combustion Chamber Volume}} = \text{Corrected Compression Ratio}$$

* Cylinder volume with the piston just closing the exhaust port

BASIC ENGINE COMPONENTS

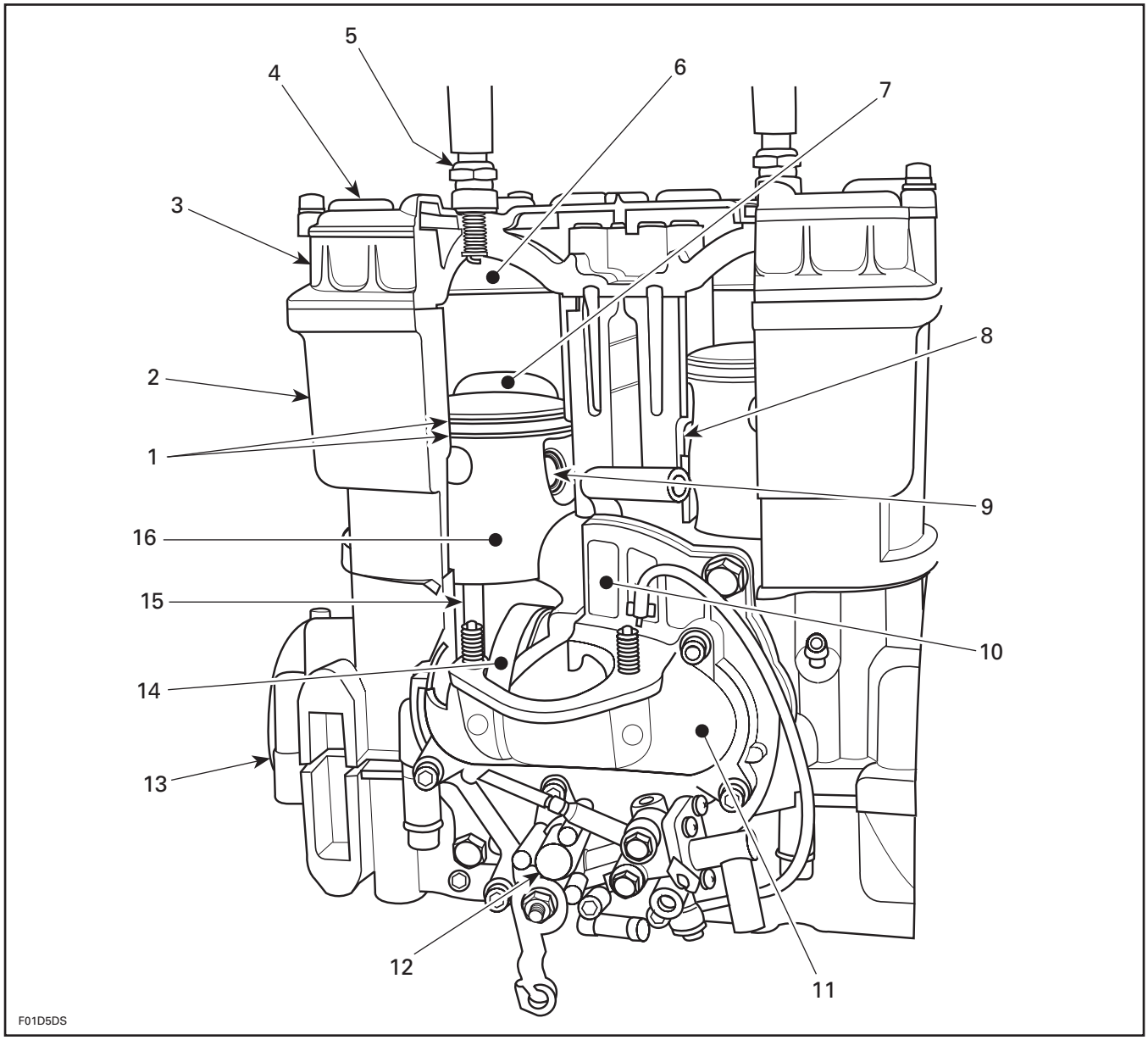

1. *Rings*
2. *Cylinder*
3. *Cylinder head*
4. *Cylinder head cover*
5. *Spark plug*
6. *Combustion chamber*
7. *Exhaust port*
8. *Transfer port*
9. *Wrist pin*
10. *Rotary valve*
11. *Intake port*
12. *Oil injection pump*
13. *Crankcase*
14. *Crankshaft*
15. *Connecting rod*
16. *Piston*

Cylinder Head

A shaped aluminum alloy casting bolted to the top of cylinder. It contains the combustion chamber and is designed with a threaded hole to accommodate a spark plug.

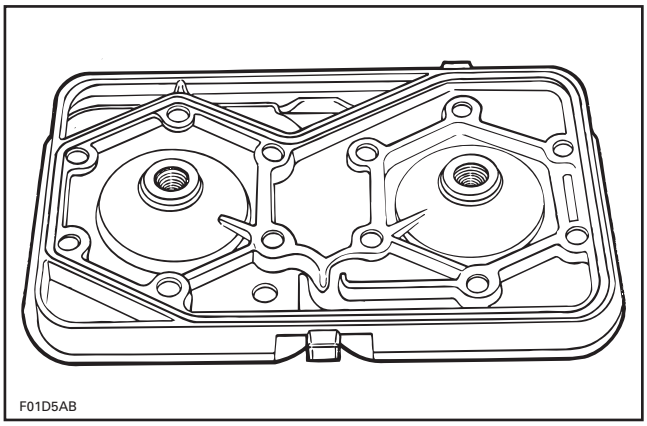

CYLINDER HEAD SHOWN WITH COVER REMOVED

High-performance engines use hemispherical heads with squish areas allowing a better dispersion when combustion occurs.

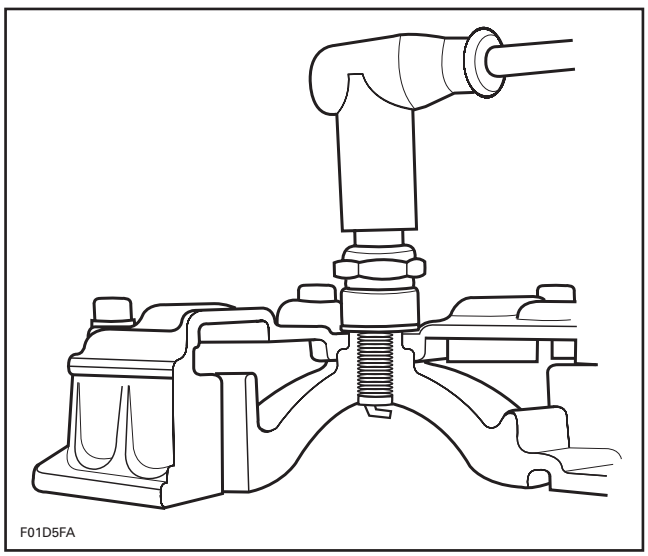

COMBUSTION CHAMBER SHAPE SHOWN

Cylinder

Characterized by the presence of intake, exhaust and transfer ports. It directs the passage of the air/fuel mixture from the crankcase to the combustion chamber. A large hole bored through it accepts a piston. Through the years, Rotax engineers have designed many types of cylinder blocks to attain better engine efficiency.

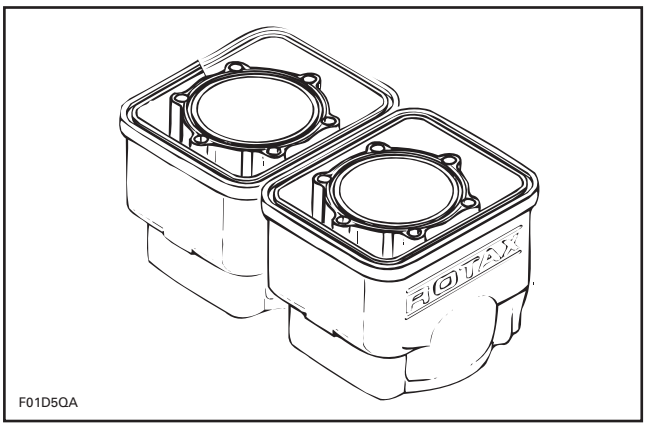

TWO CYLINDERS SHOWN

Piston

A shaped cast aluminum alloy "plug" made to fit inside the cylinder bore. It is attached to the crankshaft by a connecting rod and wrist pin.

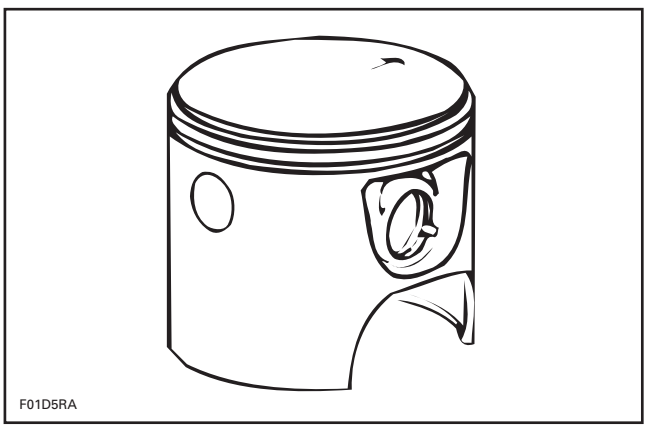

PISTON SHOWN

The piston serves 3 purposes:

1. Transmits combustion expansion forces to the crankshaft.
2. Acts as a valve for the opening and closing of exhaust and transfer ports.
3. Retains piston rings which seal the bore.

Heat flows into piston bosses on normal circular piston (center) causes distortion to oval (left). If oval turned (right), distortion converts to circular shape.

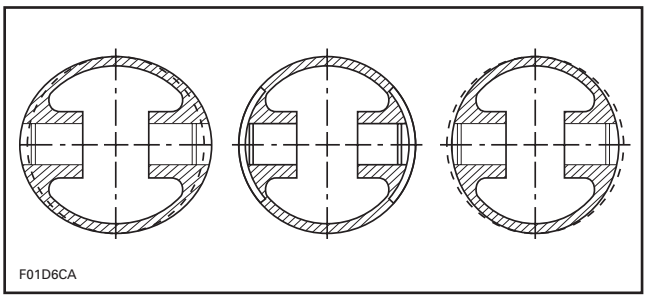

The piston is manufactured out-of-round, the reason being that wrist pin bosses have a greater volume of metal than the other sections of the piston, and consequently, will absorb more heat. The greater the absorption, the greater the area will expand. Under normal operating temperatures, the piston expands and assumes a more rounded shape.

Piston Rings

Expanding rings are placed in the grooves immediately below the piston dome. They seal the piston and cylinder wall. Within each ring groove is a small pin that provides a locating point for the ring ends. This pin prevents the ring from rotating around the ring land. Without it, rings would catch on the port edges and piston ring breakage would occur. When installing a new piston and/or piston rings, it is critically important that piston ring locating pin is matched or indexed with gap in piston ring. This should be checked as the cylinders are being installed.

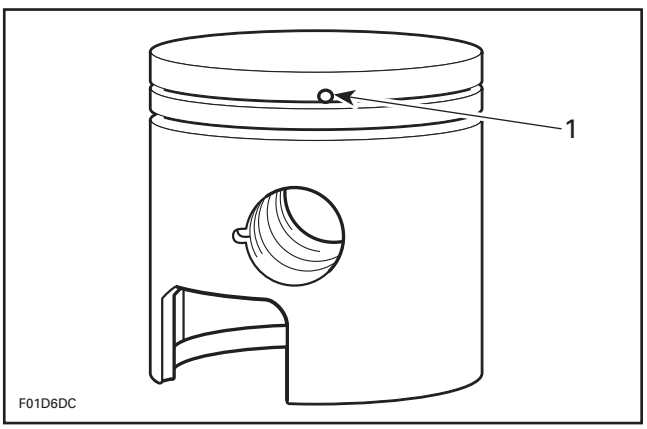

1. Locating pin

Two types of compression rings are used with Rotax pistons:

1. rectangular, cast iron
2. L-type, trapezoid, molybdenum

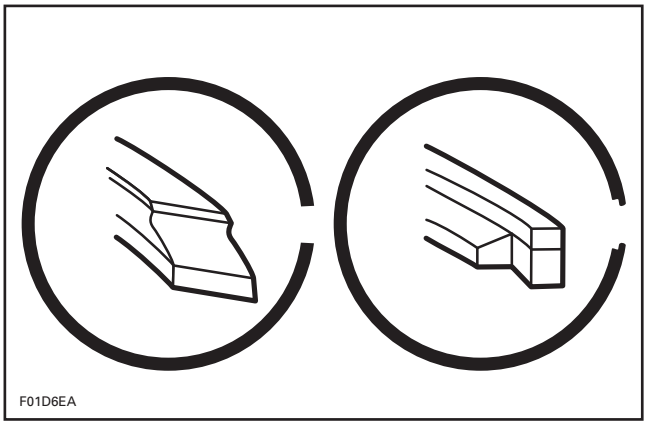

RECTANGULAR RING SHOWN ON LEFT SIDE — L-TYPE RING SHOWN ON RIGHT SIDE

Selection of the appropriate type of piston ring is relative to the use of a particular engine. For example, rectangular rings provide adequate piston sealing for a normal medium revolution engine. While performance engines with a higher revolution capacity require better than average sealing with L-type trapezoid rings.

Crankcase

Crankcases are fabricated as matched halves and are split horizontally. They are line bored and must be used as a matched set, they can not be mixed with case halves from other matched sets.

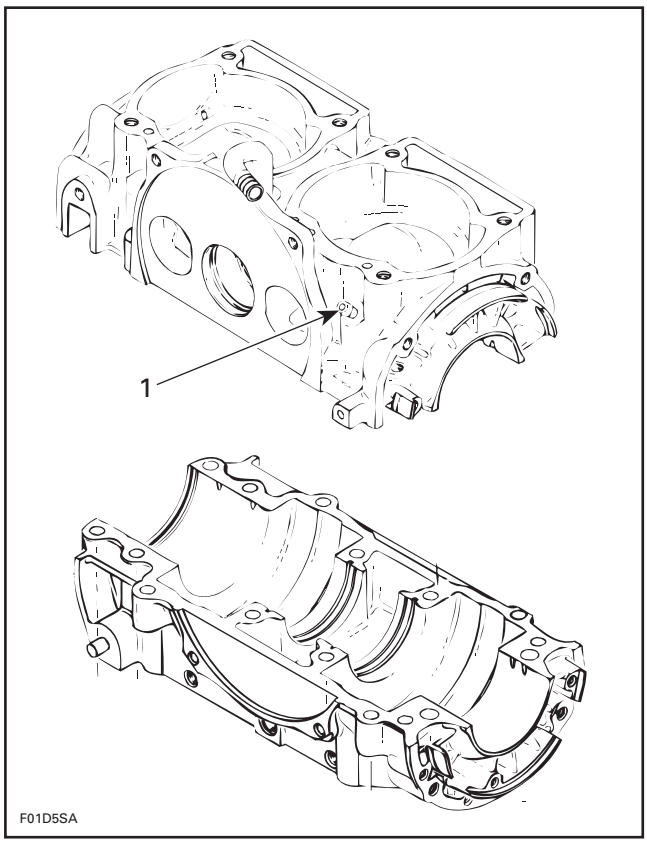

1. Pulse nipple

Material is of lightweight alloy to reduce overall engine weight. Incorporated into crankcase designs is a pulsation nipple (a tube connects the pulsation nipple to the carburetor fuel pump to assist with the fuel pumping cycle).

The engine crankcase serves 3 main functions:

1. Supports the crankshaft in perfect line bore.
2. Serves as a primary compression chamber for incoming air/fuel mixture.
3. Supporting structure for the cylinders, armature plate, coils, etc.

Crankshaft

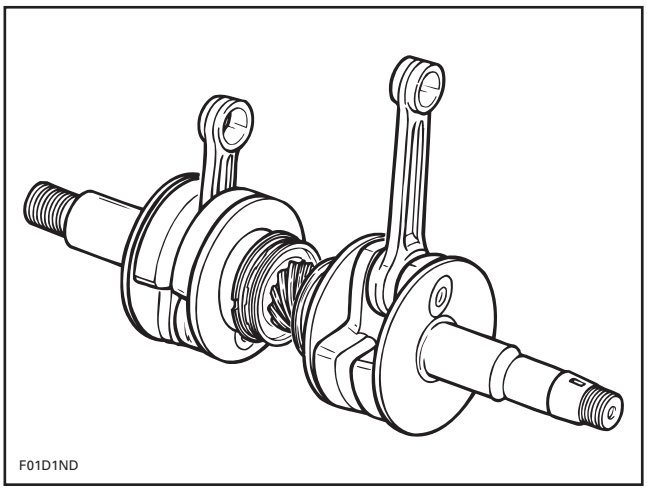

CRANKSHAFT SHOWN WITH CONNECTING RODS

The engine crankshaft is the backbone of the engine. It converts the reciprocating movement of the piston into rotary movement.

The crankshaft is supported by ball bearings mounted inside the crankcase. It is finely machined to obtain precision journals and perfect alignment. Distortion or out-of round will impair the necessary free and smooth rotation.

Connecting Rod

The connecting rod links the piston to the crankshaft. Within each bored end of the rod is a needle bearing. Rotax connecting rods are integral parts of the crankshaft assembly and therefore, are not removable unless crankshaft is disassembled with special tooling. If you are unsure about the condition of your crankshaft or if you know your crankshaft needs to be worked on, it is highly suggested that you send the crankshaft to a machine shop specializing in this type of work.

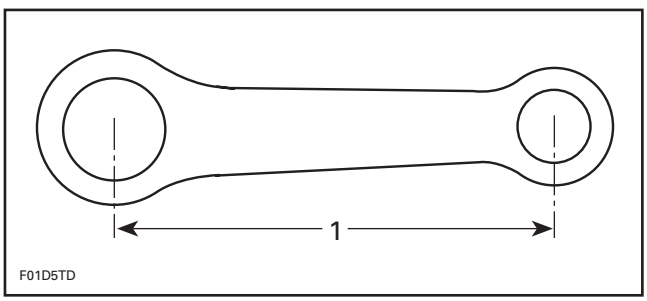

1. Connecting rod length

Less expensive engines have the crankshaft and connecting rods mounted on sleeve bearings rather than roller or needle bearings. The advantage of roller or needle bearings is less friction and longer life.

Wrist Pin

Provides support for the piston. It also links the piston to the connecting rod. This machined pin is inserted through a needle bearing resting within the upper end of connecting rod. It is supported by bosses and is locked in position with circlips.

ENGINE CONFIGURATION

Two pistons are connected to a single crankshaft mounted in a horizontally-split crankcase with 2 cylinders and a 1 piece cylinder head.

NOTE: The 947 engine has a 1 piece cylinder block.

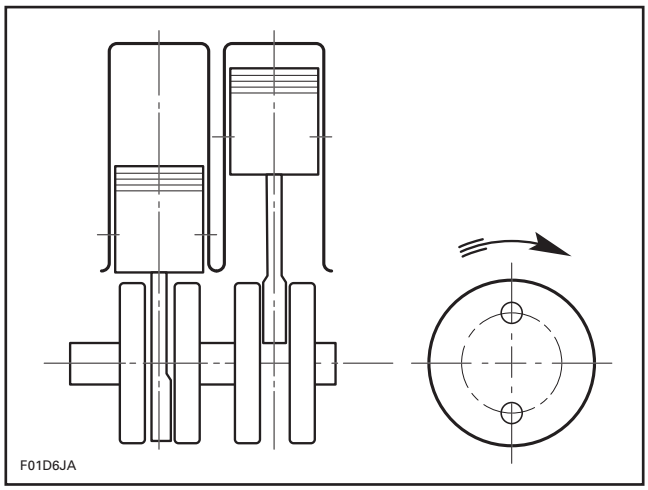

In operation, while 1 piston is at TDC, the other is at BDC, therefore producing a simultaneous ignition and transfer.

Since there is both transfer and ignition occurring, center seals isolate the primary compression areas of the crankcase and thereby, retains the equilibrium of crankcase and cylinder areas.

Transfer Ports

To achieve greater efficiency, Rotax engineers have designed the engines with 2 extra transfer ports.

An engine with 4 transfer ports enhances the rapid escape of the air/fuel mixture from the crankcase into the combustion chamber.

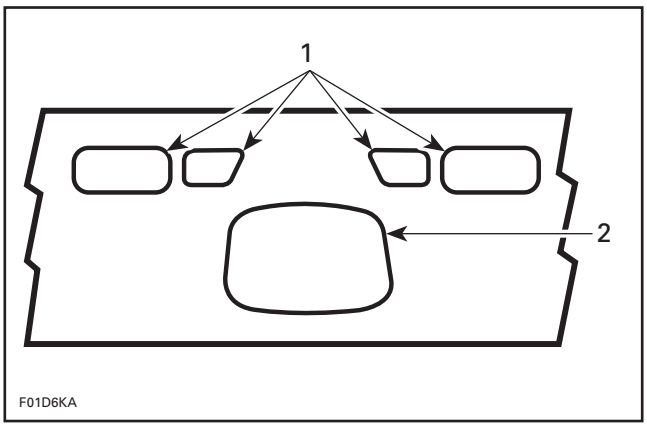

1. Transfer ports
2. Intake port

The configuration of the transfer ports is termed as being "tangential type flow". In other words, the indirect positioning of the transfer port openings in the cylinder creates an upward swirling movement of the air/fuel mixture. This swirling action is, in general, limited to the sides of the cylinder wall.

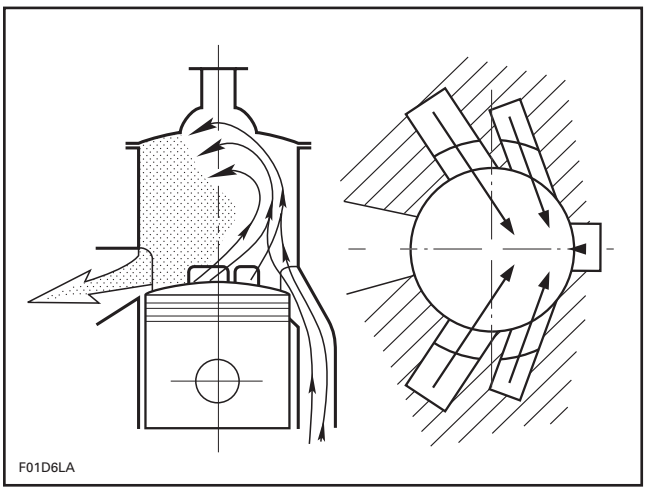

Flushing action of transfer flow; the fresh mixture staying close to the walls of the cylinder expels the burnt gases without mixing with them and/or causing turbulence.

When this upward swirl reaches the cylinder head dome, it attempts a downward inward movement. However, since the piston is also ascending at the same time, a vortex type of effect occurs. This vortex retains the air/fuel mixture in the upper part of the combustion area therefore, burnt exhaust gases are completely expelled by the vortex pressure and upward movement of the piston.

By doing this, the large volume of air/fuel mixture taken into the engine during intake is wholly retained inside the engine, and not partially expelled with the exhaust. Combustion therefore, is with a completely fresh charge.

Boost Port

The boost port or finger port as occasionally referred to, is a cavity in the wall of a cylinder. The prime purpose of this port is to assist the clearing of burnt gases from the combustion chamber. In doing so, it allows a fresher charge for the next combustion phase and at the same time, cools the piston dome. This port comes into function after the third phase of engine operation, or during the transfer stroke of the piston.

Unlike the transfer port, the boost port does not connect to the crankcase via a passage in the cylinder wall. On the 587 engine, the boost port communicates with the crankcase via a hole in the piston skirt. On all 1994 and later Sea-Doo engines (587, 657, 717, 787 and 947) the boost port is connected with the crankcase and functions much as a transfer port.

BASIC ENGINE THEORY

Basically, the 2-stroke engine performs the same operation as a 4-stroke. However, instead of completing the cycle in 4-stroke or 720° crankshaft rotation, the 2-stroke engine completes the cycle in only 360° (2-stroke). In other words, the 2-stroke engine piston travels to Top Dead Center and back to Bottom Dead Center once, to complete the intake, compression, combustion and exhaust phases.

NOTE: On all Sea-Doo engines (except the 947), the intake is controlled by a rotary valve. On the 947 engine, the intake is controlled by reed valves. In the following illustrations, the intake is controlled by the piston skirt. Although these engine configurations have their own characteristics, the basic engine theory remains the same. The illustrations are provided to demonstrate the principles of operation of a 2-stroke engine.

1. Intake and Secondary Compression

Port Condition:

Intake port: Partially opened

Exhaust port: Closed

Transfer port: Closed

Boost port: Closed

When the piston starts its upward stroke, a vacuum is created inside the crankcase and the air/fuel mixture is sucked in from the carburetor via the intake port. At the same time, the piston blocks the exhaust and transfer ports, and compresses the fuel charge in the combustion chamber (secondary compression).

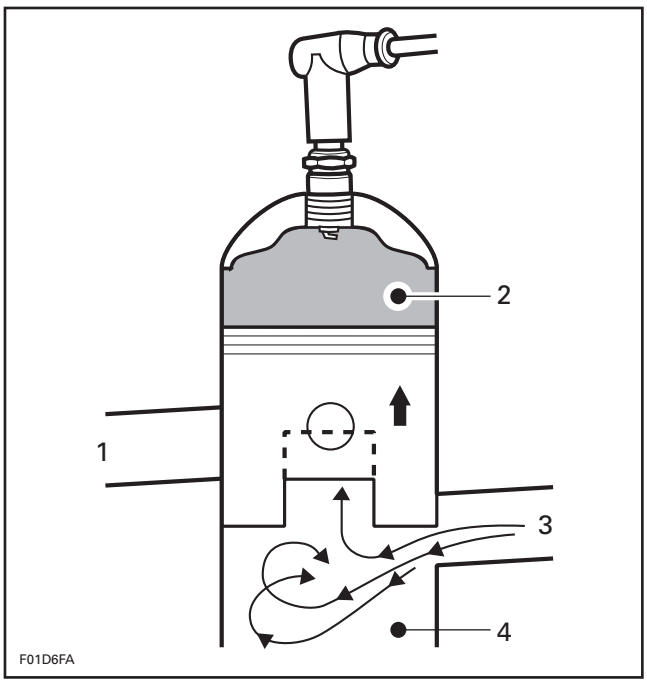

1. *Exhaust*
2. *Compressed charge*
3. *Intake*
4. *Fresh charge*

2. Ignition and Combustion

Port Condition:

Intake port: Opened

Exhaust port: Closed

Transfer port: Closed

Boost port: Closed

As the piston approaches the top of the cylinder (TDC), the compressed air/fuel mixture inside the combustion chamber is ignited by the spark plug. The burning gases expand and push the piston downward, thus causing a power stroke.

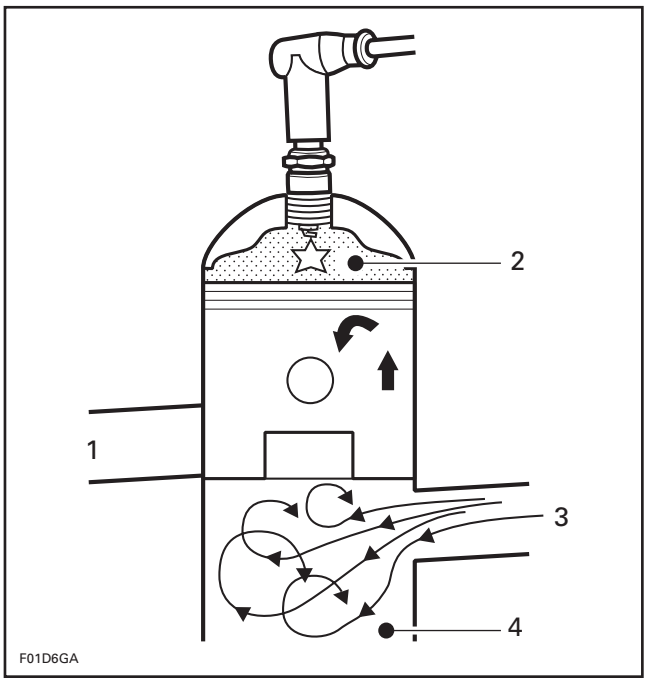

1. *Exhaust*
2. *Combustion*
3. *Intake*
4. *Fresh charge*

3. Exhaust and Primary Compression

Port Condition:

Intake port: Closed

Exhaust port: Partially opened

Transfer port: Closed

Boost port: Closed

As the piston descends, the intake port is blocked and pressure begins to build inside the crankcase (primary compression). As the piston continues its course downward, the exhaust port is uncovered and burnt gases are allowed to escape.

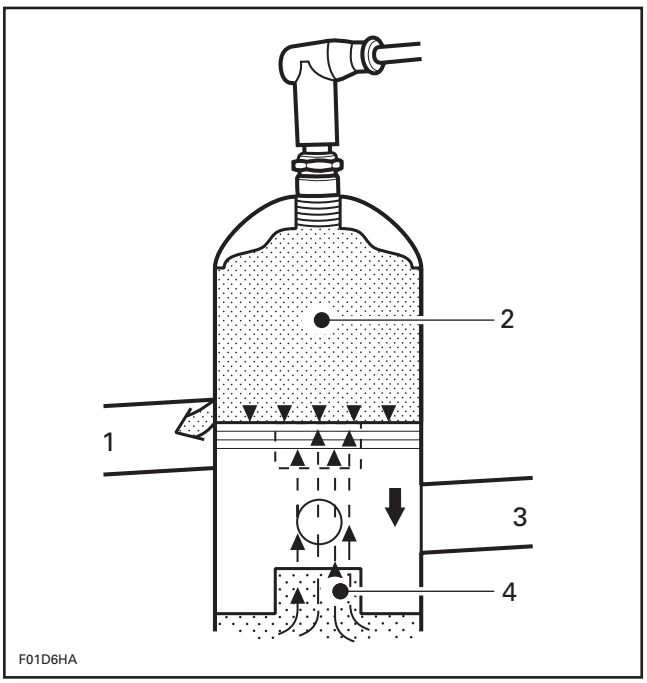

1. *Exhaust*
2. *Burnt gases*
3. *Intake*
4. *Fresh charge*

4. Transfer

Port Condition:

Intake port: Closed

Exhaust port: Opened

Transfer port: Opened

Boost port: Opened

Near the bottom of the downward stroke, the transfer port is uncovered and the compressed air/fuel mixture inside the crankcase rushes into the cylinder and combustion chamber. Just after the opening of the transfer port, the boost port opens and this allows the remaining air/fuel mixture (mixture trapped under piston crown) to flow into the combustion chamber. This assists in clearing the combustion chamber and cylinder of all burnt gases. The boost port also aids in cooling the piston dome, lubricating and cooling wrist pin bearing.

The cylinder head, transfer port and exhaust pipe design limit the escape of the fresh incoming charge to a minimum.

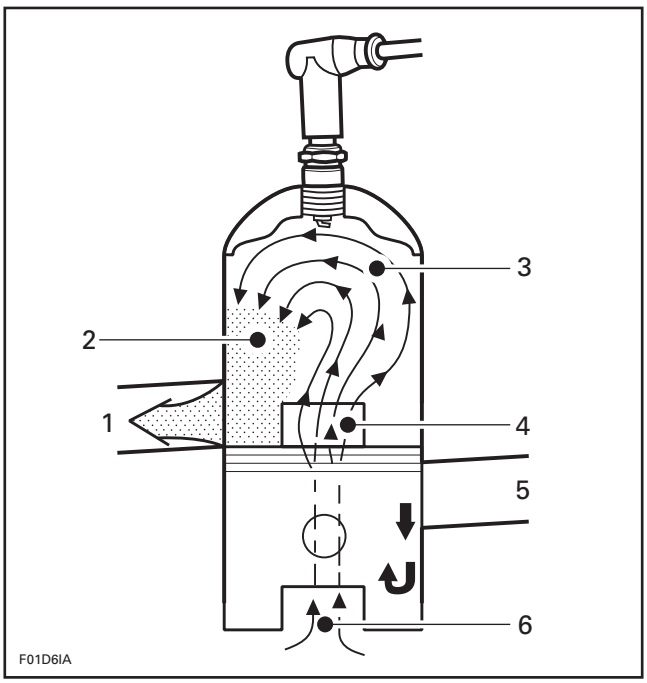

1. *Exhaust*
2. *Burnt gases*
3. *Fresh charge*
4. *Transfer port*
5. *Intake*
6. *Fresh charge*

COMBUSTION PROCESS

Normal Combustion

Since the beginning of this study we have spoken of air/fuel mixture combustion rather than explosion. This combustion is a slow then accelerated burning of the mixture within the combustion chamber. It is not an explosion. Ignition occurs with the firing of the spark plug.

This initial process generates heat and pressure which in turn, is transmitted by conduction to the contiguous portion of the unburned mixture. When this portion has reached the point of self-ignition, it starts to burn releasing more pressure and heat.

This burning action, called a flame front, travels at a speed of approximately 30 m (100 ft) per second until all mixture is burned, thus providing maximum piston thrust. The end result is a quick build up in heat causing a quick build up in pressure, forcing the piston downward.

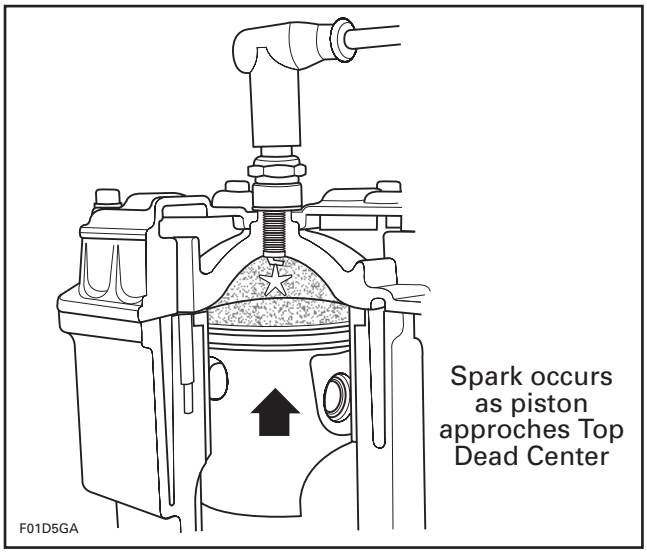

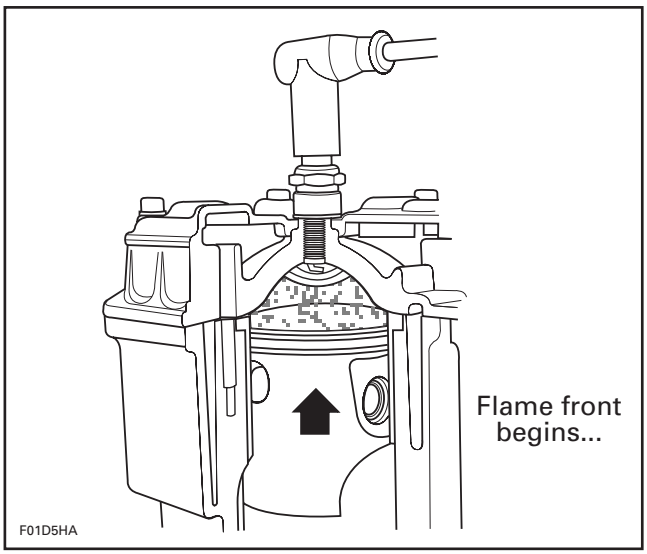

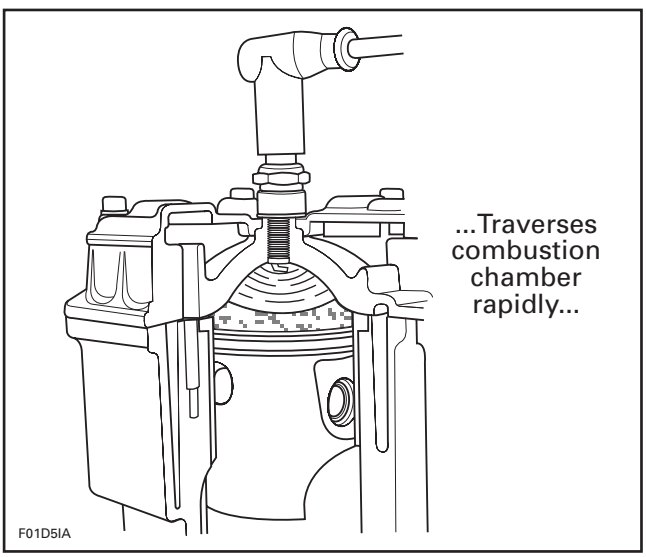

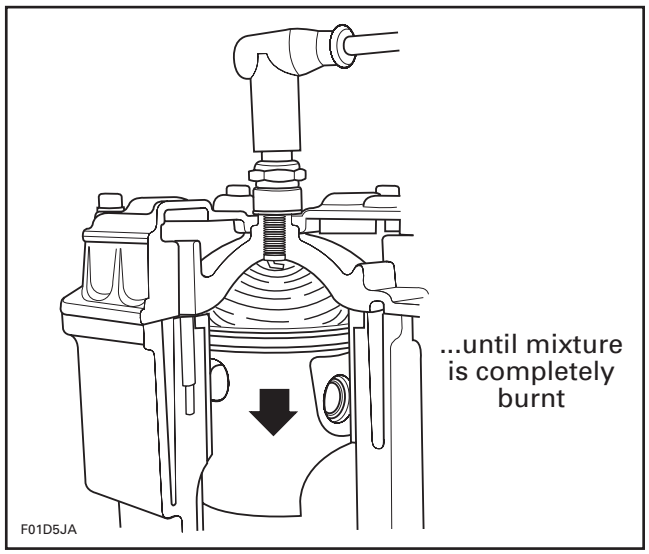

With all operating parameters correct, normal combustion will take place. However, if for some reason the temperature inside the cylinder is increased during combustion, abnormal combustion will occur and lead to serious engine damage.

Detonation

In detonation, the spark plug initiates burning and the air/fuel mixture starts to burn in the usual manner but as combustion continues, the heat generated affects the large portion of the yet unburned air/fuel mixture.

This unburned mixture temperature becomes so high that it burns spontaneously creating high-velocity pressure waves within the combustion chamber.

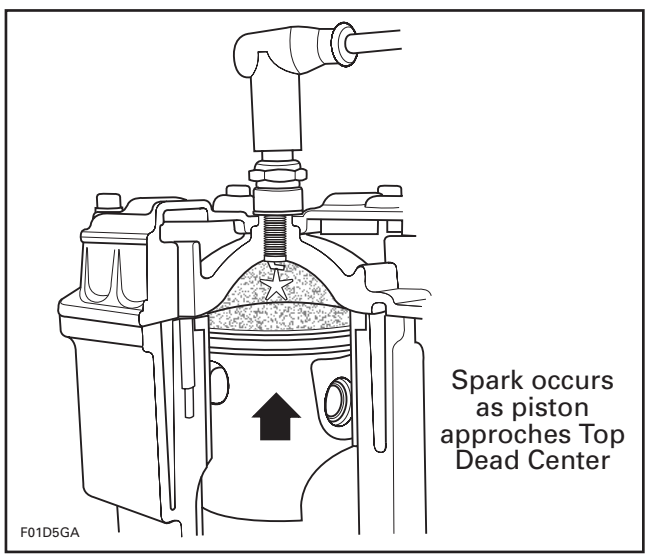

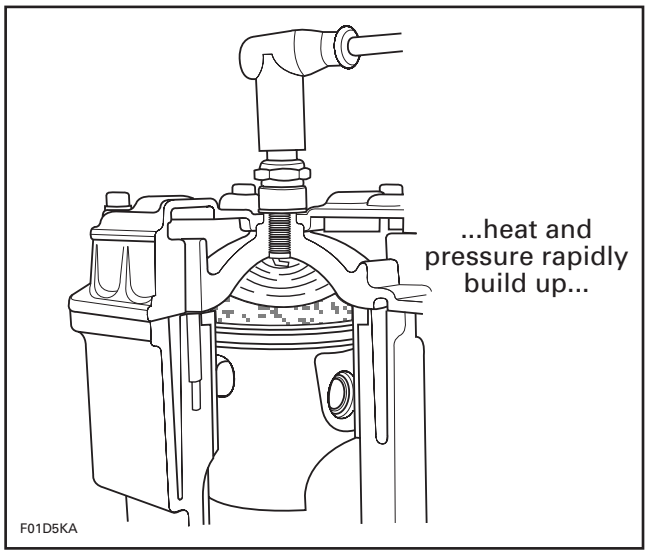

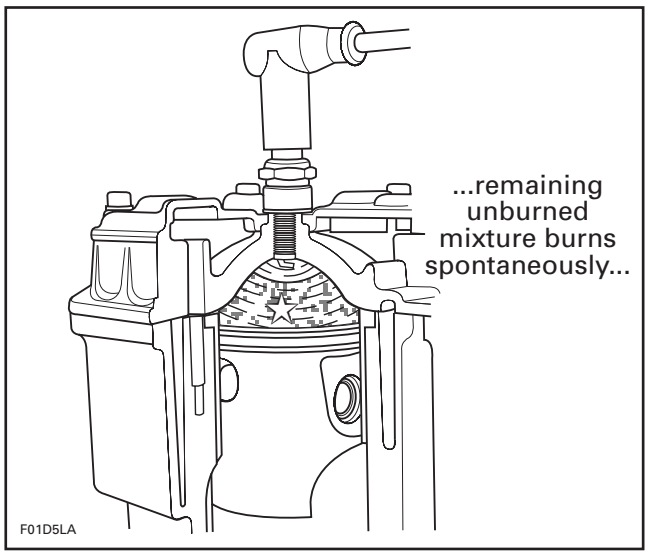

These shock waves can sometimes be heard as "pinging" (this pinging is especially detrimental to engines with raised compression ratios). While these shock waves can be detrimental to the mechanical integrity of the engine, it is the generation of excessive heat that causes most problems in 2-stroke. For many various reasons the piston may expand excessively causing a seizure or the piston dome may in fact melt. The melting will occur at the hottest points, which will be right below the spark plug and around the edge of the piston, often at a ring locating pin. If allowed to continue, a hole may melt completely through the top of the piston.

Pre-ignition

Pre-ignition is the ignition of the mixture inside the combustion chamber before the timed spark. Pre-ignition sources are generally an overheated spark plug tip or a glowing carbon deposit on the piston head. Since ignition occurs earlier than the timed spark, the hot gases stay longer in the combustion chamber, thus increasing cylinder head and piston temperatures to a dangerous level.

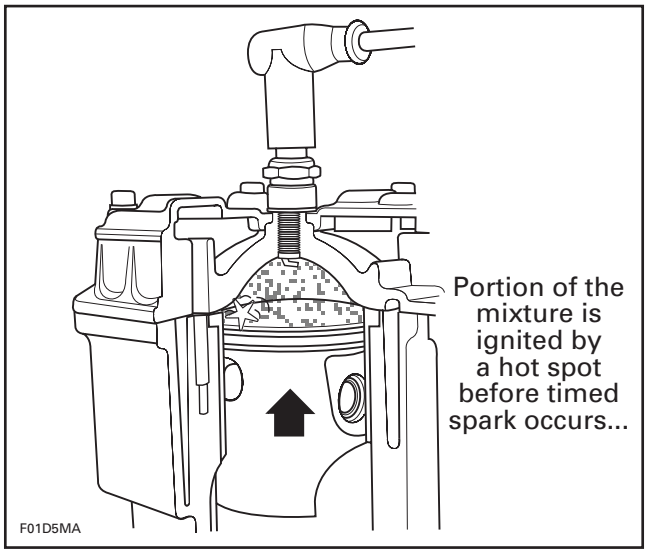

NOTE: Detonation and pre-ignition are conditions you need to be listening for as serious engine damage or complete failure may occur if this condition is allowed to continue. These 2 conditions can be heard if you are listening carefully. The engine will produce a sound similar to glass bottles rattling together or a noise which sounds like transmission gears growling. These sounds will usually be more audible at specific throttle positions. Do not hold the throttle at these positions for any longer than absolutely necessary; just the amount of time required to identify/verify that there is a problem.

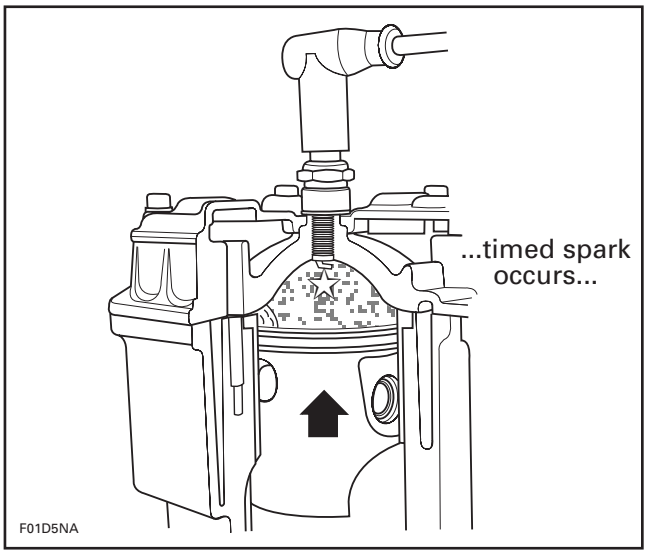

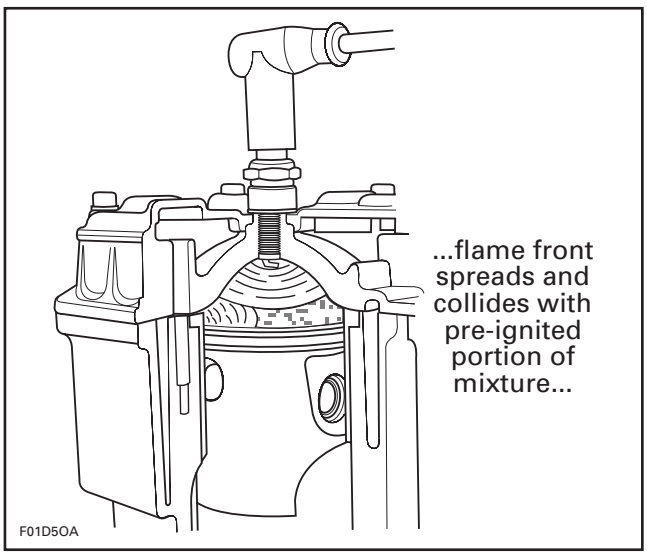

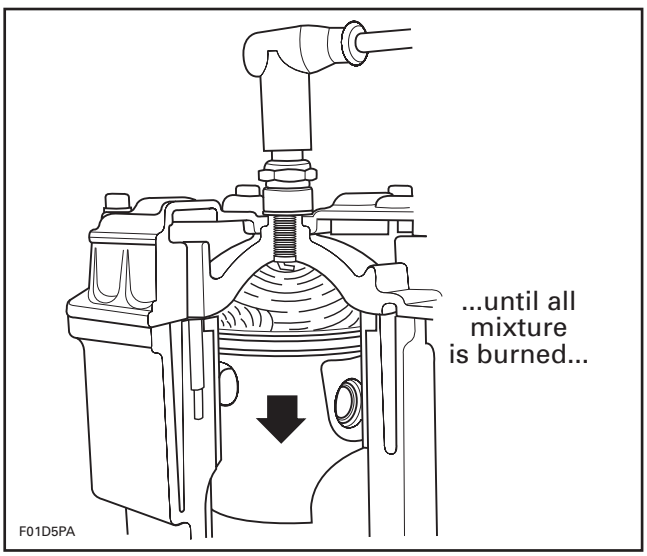

Usually the piston is subject to damage. It may seize or the aluminum on the exhaust side of the piston dome may melt. Pre-ignition is always preceded by detonation.

Causes of Detonation

1. Octane of the fuel is too low for compression ratio.
2. Air/fuel mixture is too lean.
   - incorrect jetting
   - air leaks
   - varnish deposits in carburetor
   - malfunction anywhere in fuel system
3. Spark plug heat range too hot.
4. Ignition timing too far advanced.
   - initial timing off
   - ignition component failure
5. Compression ratio too high for fuel being used.
   - improperly modified engine
   - deposit accumulation on piston dome or head
6. Exhaust system restrictions.
   - muffler plugged/restricted
   - tune pipe outlet diameter too small
   - incorrect design of expansion chamber
7. General overheating.
   - restriction in cooling system
   - debris in water pick-up
8. Water entering combustion chamber.

SQUISH AREA

Rotax cylinder heads incorporate a squish area. This area is basically a “ledge” projecting beyond combustion chamber area. In operation, as the piston ascends and approaches the ledge, a rapid squeezing action is applied to the air/fuel mixture contained in the area immediately between the piston dome and the ledge. This squishing action forces the entrapped mixture rapidly into the combustion chamber area, creating a greater mixture turbulence. Additionally, the small volume and large surface area of the squish band allow a better cooling of the end gases to help prevent detonation.

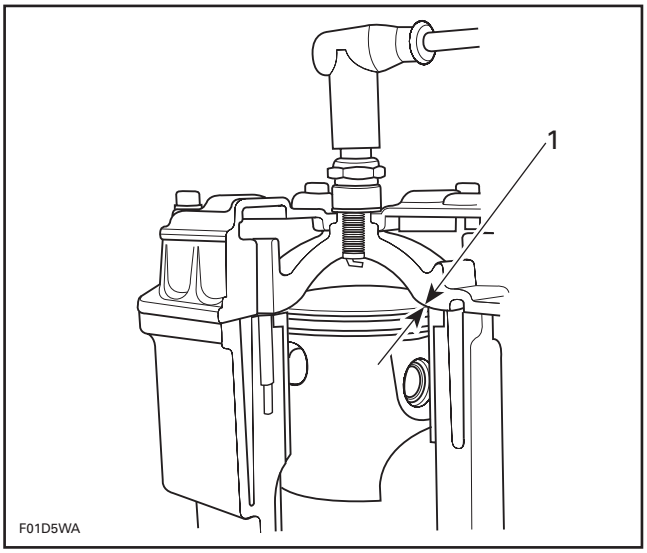

1. Squish area

If the squish clearance is increased, a loss in power will occur while too small a squish clearance will lead to detonation.

The squish clearance can be measured by inserting a piece of resin core solder into the combustion chamber, rotating the engine through Top Dead Center, removing the solder and measuring the thickness of the compressed solder.

The solder should be inserted above and in line with the wrist pin.

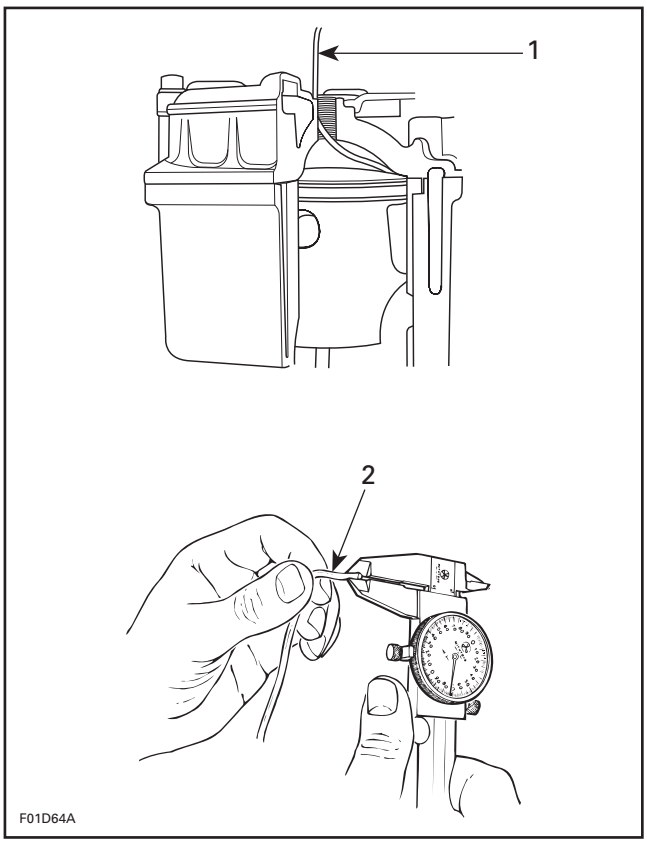

1. *Solder*
2. *Measure here*

CAUTION

Do not use acid core solder; the acid can damage the piston and cylinder.

NOTE: If you are machining your cylinder head to increase compression ratio, be sure to respect proper squish band tolerances in the machining process.

Squish Area of Production Engines

- 1.30 mm – 1.70 mm (.051 in – .067 in) engine type 587
- 1.00 mm – 1.40 mm (.039 in – .055 in) engine type 657
- 1.30 mm – 1.70 mm (.051 in – .067 in) engine type 717
- 1.30 mm – 1.70 mm (.051 in – .067 in) engine type 787

Squish Area of Prepared Engines

Uncorrected compression ratio: up to 14.5: 1

- 1.00 mm – 1.60 mm (.039 in – .063 in) engine type 587
- 0.80 mm – 1.40 mm (.031 in – .055 in) engine type 657
- 1.00 mm – 1.60 mm (.039 in – .063 in) engine type 717
- 1.00 mm – 1.60 mm (.039 in – .063 in) engine type 787

CAUTION

Reducing squish area may require using higher octane fuel as well as retarding ignition timing.

COMBUSTION CHAMBER VOLUME MEASUREMENT

The combustion chamber volume is the region in the cylinder head above the piston at Top Dead Center. It is measured with the cylinder head installed on the engine.

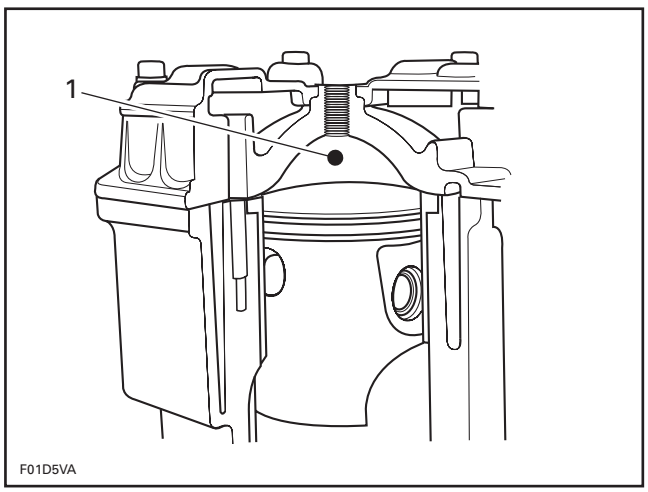

1. *Combustion chamber*

NOTE: When checking the combustion chamber volume, engine must be cold, piston must be free of carbon deposit and cylinder head must be leveled.

1. Remove both spark plugs and bring one piston to Top Dead Center a using a TDC gauge.

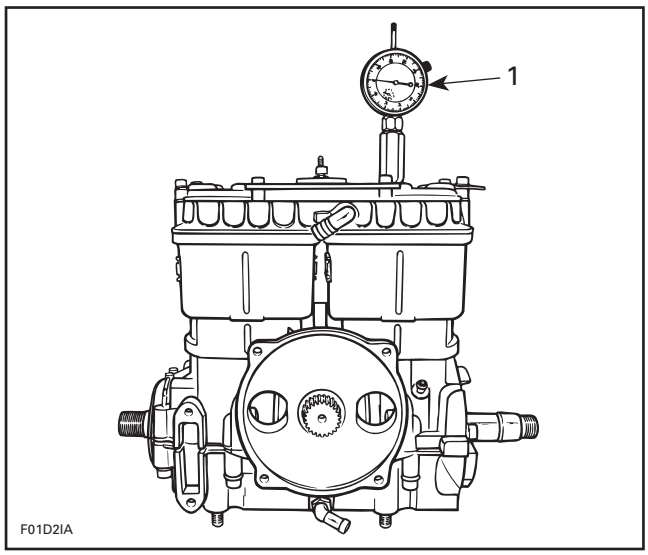

1. Bring piston to TDC

2. Obtain a graduated burette (capacity 0-50 cc) and fill with an equal part (50/50) of gasoline and injection oil.

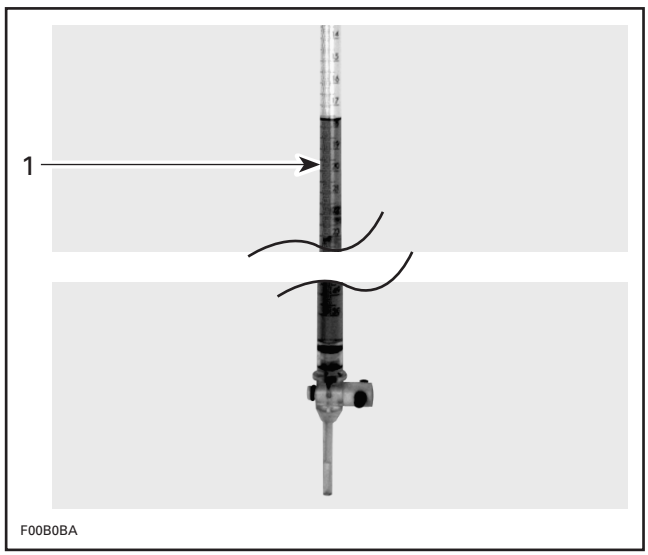

1. Graduated burette (0-50 cc)

3. Open burette valve to fill its tip. Add liquid in burette until level reaches 0 cc.
4. Inject the burette content through the spark plug hole until liquid touches the top of the spark plug hole.

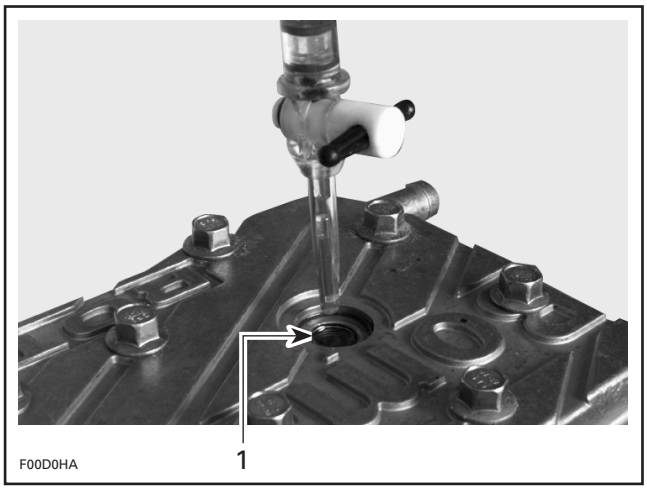

1. Top of spark plug hole

NOTE: The liquid level in cylinder must not decrease after filling. If so, there is a leak between piston and cylinder. The recorded volume would be false.

5. Let burette stand upward for about 10 min, until liquid level is stabilized.
6. Read the burette scale to obtain the quantity of liquid injected in the combustion chamber. Record the volume which we will note as V_2.

NOTE: When the combustion chamber is filled to top of spark plug hole, it includes an amount of 2.25 cc for this space (BR7ES or BR8ES have a 19 mm reach head).

Repeat the procedure for the other cylinder.

CALCULATING THE COMPRESSION RATIO

Uncorrected Compression Ratio

The uncorrected compression ratio of an engine is the volume of a cylinder plus the volume of the combustion chamber divided by the volume of the combustion chamber.

$$C.R. = \frac{V_1 + V_2}{V_2}$$

WHERE:

C.R. = Compression Ratio: 1

V_1 = Volume of the cylinder

$$V_1 = \frac{B^2 \times S \times \pi}{4}$$

V_2 = Volume of the combustion chamber

π = 3.1416

B = Bore (cm)

S = Stroke (cm)

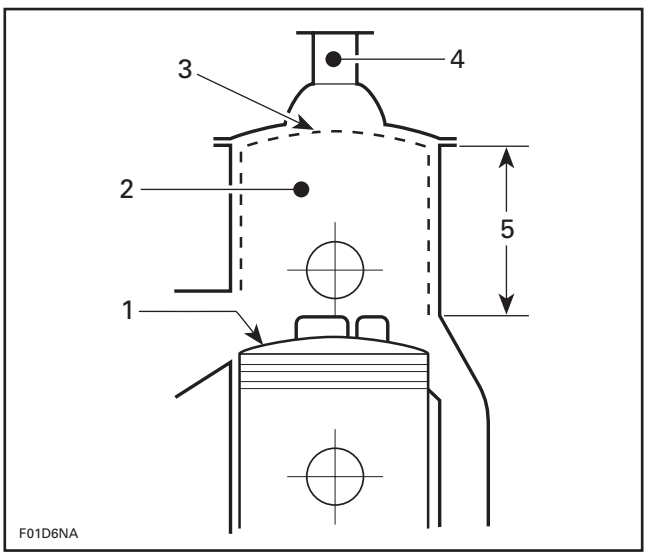

1. *BDC*
2. *V_1*
3. *TDC*
4. *V_2*
5. *Stroke*

EXAMPLE:

B = 76 mm

S = 64 mm

V_2 = 27.6 cc

$$V_1 = \frac{7.6^2 \text{ cm} \times 6.4 \text{ cm} \times \pi}{4} = 290.3 \text{ cc}$$

$$C.R. = \frac{290.3 \text{ cc} + 27.6 \text{ cc}}{27.6 \text{ cc}}$$

C.R. = 11.5: 1 UNCORRECTED

Uncorrected Compression Ratio of Production Engines

- 11.5: 1 engine type 587
- 12.2: 1 engine type 657
- 12.25: 1 engine type 717
- 11.25: 1 engine type 787
- 11.75: 1 engine type 947

Corrected Compression Ratio

In a 2-cycle engine, a portion of the stroke is opened to the atmosphere via the exhaust port. The corrected compression ratio is calculated as the piston closes the exhaust port.

$$C.C.R. = \frac{V_3 + V_2}{V_2}$$

WHERE:

C.C.R. = Corrected Compression Ratio

V_3 = Volume of a cylinder with piston just closing the exhaust port

V_2 = Minimum combustion chamber volume

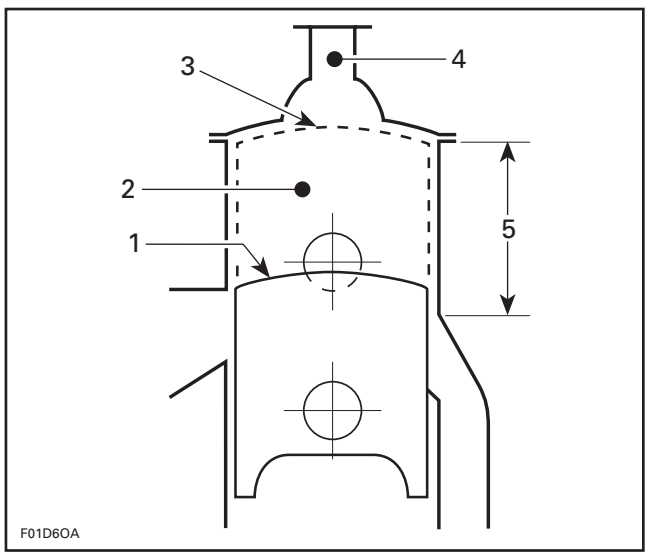

1. *Exhaust port just closed*
2. *V_3*
3. *TDC*
4. *V_2*
5. *Stroke*

CALCULATING MACHINING CYLINDER HEAD HEIGHT VERSUS COMBUSTION CHAMBER VOLUME

$$H = \frac{V_M - V_D}{\pi \times \left(\frac{B}{2}\right)^2}$$

WHERE:

H = Material to be machined from face of cylinder head (cm)

V_M = Measured combustion chamber volume (cc)

V_D = Desired combustion chamber volume (cc)

$$V_D = \frac{V_1}{CR_D - 1}$$

V_1 = Volume of cylinder

CR_D = Desired compression ratio

π = 3.1416

B = Bore of cylinder (cm)

EXAMPLE:

Desired compression ratio (CR_D) = 14.0: 1

$$V_D = \frac{V_1}{CR_D - 1} = \frac{248.4 \text{ cc}}{14.0 - 1} = 19.1 \text{ cc}$$

$$H = \frac{V_M - V_D}{\pi \times \left(\frac{B}{2}\right)^2} = \frac{21.5 \text{ cc} - 19.1 \text{ cc}}{3.14 \times \left(\frac{7.2}{2}\right)^2}$$

H = 0.059 cm = 0.59 mm = (.023 in)

OCTANE REQUIREMENTS FOR ROTAX ENGINES

Following is a set of guidelines for a suggested relationship between uncorrected compression ratio, combustion chamber squish band clearance, and octane requirements for an engine built to compete in racing. These are only suggested guidelines and are not the only factors involved in the complete building of a reliable race ready engine. All Rotax engines will perform best on unleaded regular gasoline of the proper octane. There is no advantage of using a higher octane fuel if the compression ratio is not higher than production. However, if the compression ratio is higher, it may become necessary to use a higher octane fuel or engine damage will result. Do not use a compression gauge to determine compression ratio. A compression pressure test is useful in checking general condition of any engine, but is useless when checking compression ratio.

Minimum octane requirement for production engines: 87 RM (regular unleaded).

R = Research octane number = 90

M = Motor octane number = 84

$$\frac{R + M}{2} = 87 \text{ octane}$$

Minimum octane requirement for engines with higher compression ratio: (premium unleaded):

Up to 14: 1 = 108-112 motor octane

Over 14: 1 = 114 motor octane

RAVE VALVE OPERATION

Theory

For a 2-stroke cycle engine to have high power capacity at high crankshaft speeds, a high volumetric or breathing efficiency is required and the fresh charge losses must be minimized. The result is achieved by opening the exhaust port early and utilizing the resonant effects of the tuned exhaust system to control fresh charge losses.

When an engine of this design is run at a high speed, efficiency falls off quickly. The relatively high exhaust port effectively shortens the useful power stroke and because the exhaust system is tuned for maximum power, there is a large increase of fresh charge losses at lower speeds. As a result, the torque decreases along with a dramatic increase of the specific fuel consumption. Higher torque along with lower fuel consumption can be obtained at lower engine speeds if the time the exhaust port is open is shortened.

Bombardier-Rotax has patented a remarkably simple system to automatically change the exhaust port height based on pressure in the exhaust system.

Located above the exhaust port is a guillotine-type slide valve. This rectangular valve is connected by a shaft to a diaphragm which is working against a return spring. One small passage in the cylinder just outside the exhaust port allow exhaust gas pressure to reach the diaphragm.

To the outside of the return spring is a red plastic adjustment knob. Turning the adjustment in or out changes the preload on the return spring which, in turn, will change the RPM at which the RAVE valve opens and closes.

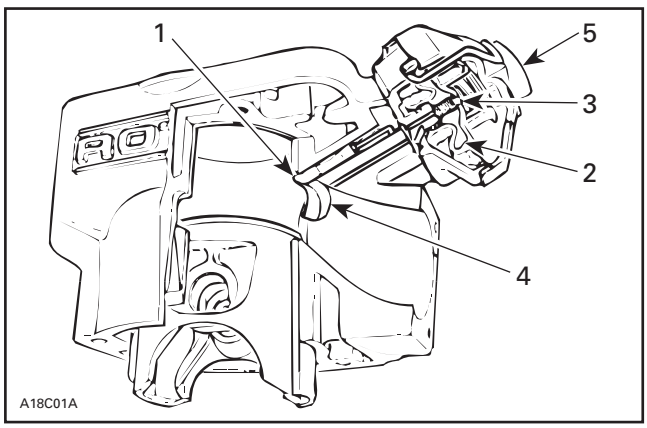

1. *Sliding valve*
2. *Diaphragm*
3. *Spring*
4. *Exhaust port*
5. *Adjustment knob*

As the throttle is opened and the engine begins producing more power, the pressure against the diaphragm will overcome the pressure of the return spring and the RAVE valve will open.

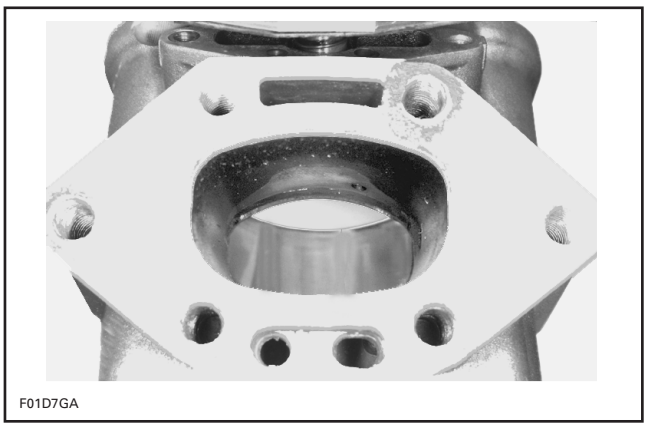

VALVE FULLY OPENED

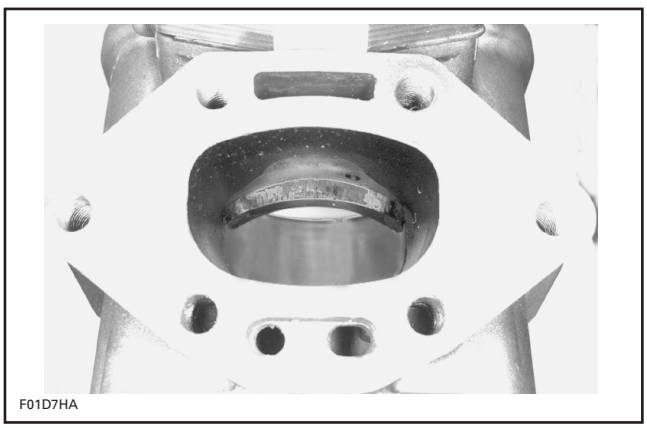

VALVE FULLY CLOSED

The RAVE valve does not allow an engine to make higher peak horsepower than an engine not so equipped, it can however make moving the peak horsepower higher practical, because of its effect on the rest of the power curve. Item 2 in the following figure is the power curve of an engine with the RAVE valve held fully open through its entire RPM range. Item 6 notes the peak power produced. That peak will not change if the exhaust port time of a similar engine without a RAVE valve was the same (with all other features equal).

Item 1 is the power curve of the engine with the RAVE valve closed through its entire RPM range. The shaded area (item 3) is the improvement in power at lower engine speeds that is gained because of the lower exhaust port. If the port remains at this height however, the power would peak as noted in item 5. Raising the exhaust port at the proper RPM (item 7) will allow the engine peak power to continue to rise (item 6).

Item P1 in the figure is the force of the return spring against the diaphragm. The exhaust pressure must be high enough to overcome this force before the valve begins opening. Item P2 is the pressure required to completely open the RAVE valve. Between P1 and P2, the usable power curve of the engine is moving from curve 1 to power curve 2. This transition takes place very rapidly at full throttle and from a practical standpoint can be considered to be instantaneous at item 7. Gradual application of the throttle, however, will result in the RAVE valve opening much later.

If the RAVE valve opens toos late, the engine will bog or hesitate momentarily as the RPM increases. Full peak performance (item 6) is still available. From a functional point of view. It is better to have the valve open a bit early than a bit late.

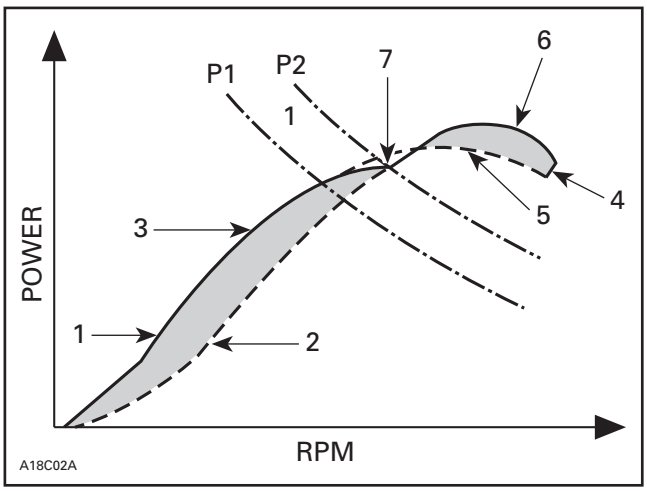

Rave Valve Adjustment

To adjust the RAVE valve turn the red adjustment knob all the way in (clockwise). Open the red knob 1 turn out (counterclockwise) and perform an acceleration run on the craft starting from zero and accelerating to full speed. Repeat the procedure until you attain the best performance. The use of a radar gun with acceleration recording capabilities is advised in order to obtain accurate data, however rider observation will suffice.

Maintenance

The RAVE components should be periodically checked. The RAVE valve requires cleaning of carbon deposits. Cleaning intervals would depend upon the user's riding style and the quality of the oil used. Use FORMULA XP-S synthetic injection oil and clean the valve periodically. Check for clean passages between the exhaust port and diaphragm chamber. If cleaning is necessary, use solvent to remove the deposits. Also check the diaphragm for punctures, replace if damaged.

No special solvents or cleaners are required when cleaning the valve.

Cylinder Boring Precaution

In its stock configuration the RAVE valve guillotine has a minimum of 0.5 mm (.020 in) clearance to the cylinder bore measured at the center line of the cylinder. This is the minimum production clearance.

There is only a first oversize piston available. It is 0.25 mm (.010 in) larger in diameter than the stock piston. When the oversize is installed, the guillotine will have a minimum clearance of 0.375 mm (.015 in) with the cylinder bore. This is the minimum operating clearance the guillotine should be used with. Clearance less than 0.375 mm (.015 in) will require reworking of the guillotine to achieve the proper clearance and radius.

NOTE: When boring the cylinders on the 787 engine, the displacement will be 785.76 cm^3 after boring and honing. The engine will no longer be race legal for the 785 cc class racing. In order to maintain legality, new cylinder sleeves and new stock diameter pistons should be installed.

FUNCTION OF THE ROTARY VALVE INTAKE SYSTEM

Controlling the opening and closing of the intake port is also a critical factor in the volumetric efficiency of an engine. Best V.E.'s are obtained by asymmetrical intake timing (opening and closing of intake port operates independently with regard to piston position. Example: 130° BTDC opening, 65° ATDC closing). While also allowing for an unobstructed intake tract to provide maximum airflow into the engine. This is best accomplished by using a rotary valve type inlet.

The rotary valve engine is one of the most innovative concepts to be applied to 2-stroke watercraft engines.

Simply stated, the design produces more horsepower out of the same size engine displacement at the same RPM. Because the aperture size and degree of opening exceed that of a piston port engine, a greater air/fuel mixture supply can enter the engine and remain in the engine without spitback.

Engine Operation

Basically, the rotary valve engine performs the same operation as the piston port 2-stroke engine. The only difference being the location and operation of intake.

1. The intake port is positioned directly in the crankcase.
2. The opening and closing of the intake port is controlled by a rotary valve instead of the piston.
3. The rotary valve is driven by the crankshaft in a counterclockwise direction.

Intake and Secondary Compression

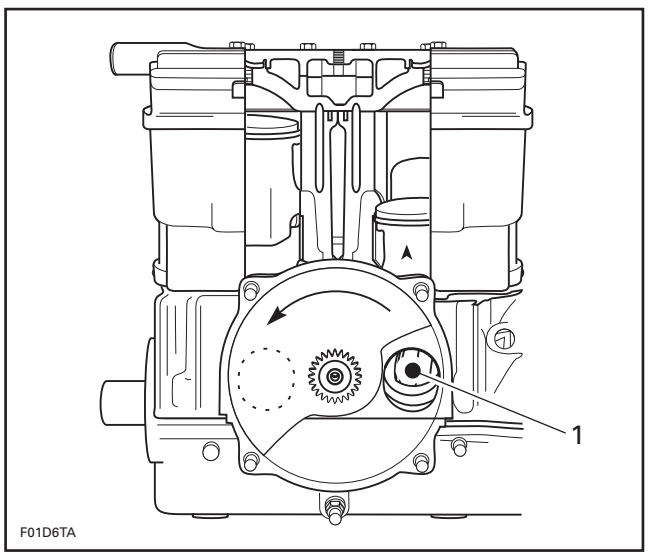

1. Fresh charge from carburetor

As the piston starts its upward stroke, the air/fuel mixture is drawn into the crankcase from the carburetor via the intake port (the rotary valve uncovers the intake port).

At the same time, the piston blocks the exhaust and transfer ports, and compresses the air/fuel mixture in the combustion chamber (secondary compression).

Ignition and Combustion

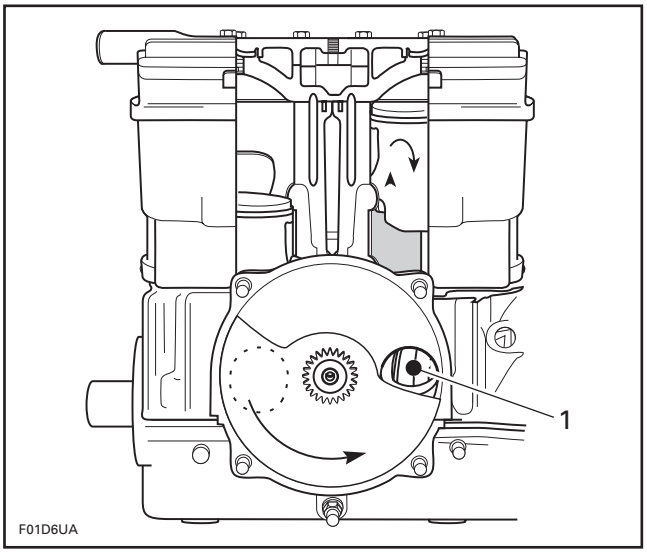

1. Fresh charge

As the piston nears the top of the cylinder (TDC), the compressed air/fuel mixture in the combustion chamber is ignited by the spark plug. The burning gases expand and push the piston downward, thus causing a power stroke.

Exhaust and Primary Compression

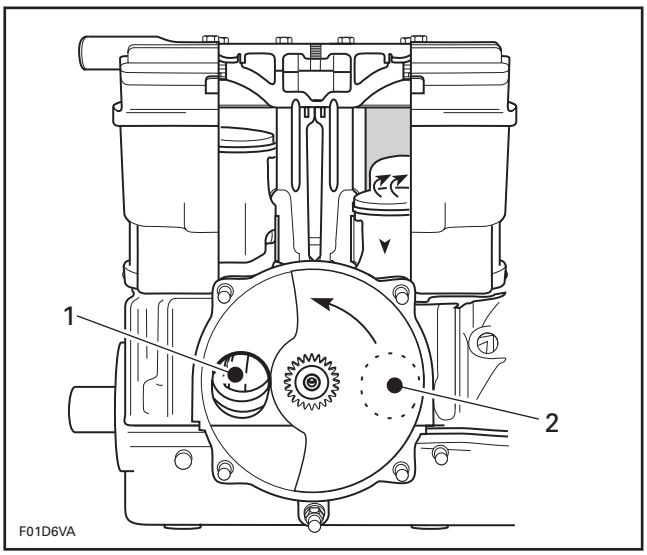

1. Fresh charge for the other cylinder
2. Intake port covered

As the piston descends, the intake port is blocked by the rotary valve and pressure begins to build inside the crankcase (primary compression). The exhaust port is uncovered as the piston continues its course downward, and burnt gases are allowed to escape.

Transfer

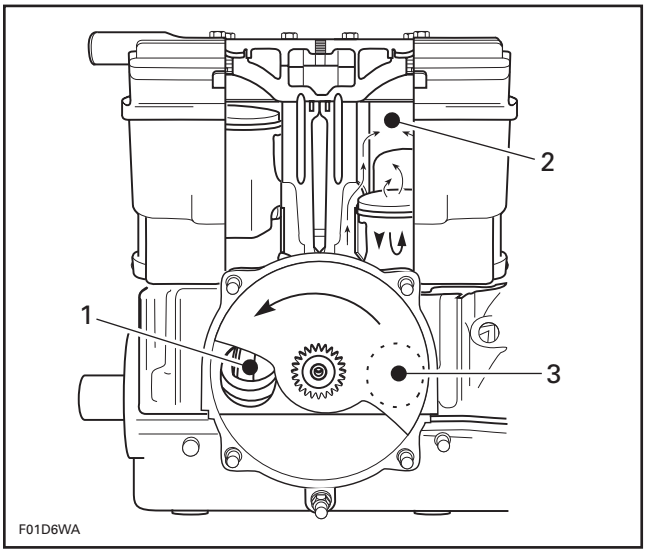

1. *Fresh charge for the other cylinder*
2. *Fresh charge*
3. *Intake port covered*

Near the bottom of the downward stroke, the transfer ports are uncovered by the piston, and the compressed air/fuel mixture in the crankcase rushes into the combustion chamber via the transfer ports. Piston dome and combustion chamber configuration and exhaust back pressures prevent fresh charge (air/fuel mixture) from escaping through the exhaust port. This also assists in clearing the combustion chamber of all burnt gases.

Rotary Valve Drive Gears

Located in crankcase halves between the 2 cylinder bases. These gears transmit crankshaft rotation to the 90° angled rotary valve shaft.

The helical gear mounted on the rotary valve shaft uses the crankshaft as a power source. To prevent overheating and provide lubrication, the gears operate in an oil bath.

To prevent pressurization of the system, a vent tube from the top of the gear chamber returns to the oil reservoir which is vented to the atmosphere.

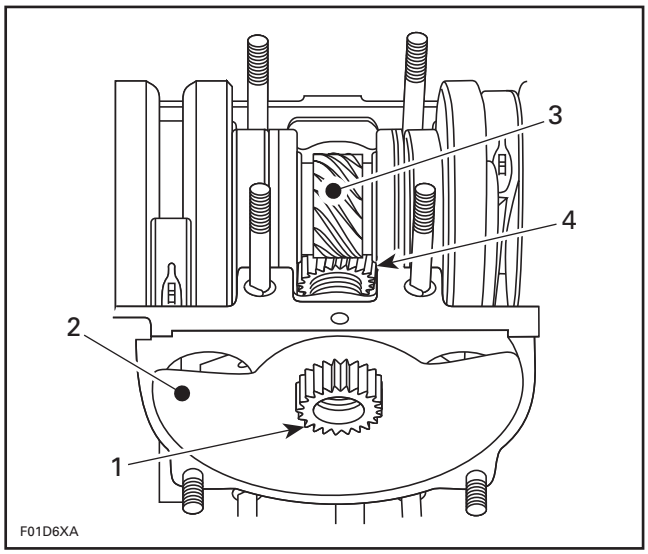

1. *Pinion (on rotary valve shaft)*
2. *Rotary valve*
3. *Gear (crankshaft)*
4. *Gear (on rotary valve shaft)*

Advantages of the Rotary Valve Engine

The major differences between a piston port engine and a rotary valve engine are:

1. Intake port directly positioned in the crankcase.
2. The opening and closing of the intake port is controlled by a rotary valve instead of the piston, allowing asymmetrical timing.

The use of a rotary valve enables a very short inlet track. The design introduces the mixture in a very suitable position without obstruction to the gas flow that would impair the volumetric efficiency. This intake position also enhances the lubrication of the lower connecting rod bearings. With rotary valves, the opening duration of the intake port is specifically controlled by the valve. Therefore, it is possible to determine the maximum possible intake with benefit to crankcase filling.

The following chart indicates the intake phase differences between a piston port engine and a rotary valve engine.

INTAKE	PISTON PORT ENGINE	ROTARY VALVE ENGINE
Total Duration	150°	195°
Opening (BTDC)	75°	130°
Closing (ATDC)	75°	65°

As shown for the rotary valve engine, the total duration of the intake is greater and the opening starts earlier. This results in a better volumetric efficiency.

In the rotary valve engine, the intake closes earlier to avoid fresh charge spitback.

With the rotary valve, duration of the intake is asymmetrical. In piston port engines, intake duration is symmetrical. With the central rotary valve, complete control of intake timing means greater torque at lower RPM's, more peak power and easier starting.

Some modern engines such as the 947 use reed valves in the crankcase to increase overall performance over piston port designs. The main advantages are:

- intake port directly positioned in the crankcase similar to a rotary valve engine
- short intake track
- substantial improvement of engine torque

The reed valve engine has also other benefits worth mentioning:

- lightweight and compact design
- easier assembly and maintenance
- cost effective design

However, reed valve engines do have some disadvantages over the rotary valve engine. These disadvantages are:

- The intake port is restricted by the reeds and cage.
- The reeds tend to separate air from fuel.
- Since the crankcase "vacuum" must first open the reed to permit intake, this initial force is not fully applied to the intake operation. Consequently, there is a partial loss of intake potential.
- At high speeds, the delay in closing the reed affects the reopening of the reed. Again potential volumetric efficiency is affected.
- The continual "rebounding" of the reed causes further intake restrictions.

Inspection of the Rotary Valve

Inspect rotary valve cover for warpage. Small deformation can be corrected by surfacing with a fine sandpaper on a surface plate. Surface part against oiled sandpaper.

Inspect bearings. Check for scoring, pitting, chipping or other evidence of wear. Make sure plastic cage (on bigger bearing) is not melted. Rotate them and make sure they turn smoothly.

Check for presence of brass filings in gear housing.

Visually check gear wear pattern on gears. It should be even on each tooth for the complete rotation of the gears. Uneven wear could indicate a bent shaft; check for deflection. Replace gear if damaged.

There should be no deflection in the rotary valve shaft. If there is, the shaft must be replaced.

Rotary Valve/Cover Clearance

The clearance between the rotary valve and the cover must be 0.30 ± 0.05 mm (.012 ± .002 in).

NOTE: If the clearance is below 0.25 mm (.010 in) this could create an overheating situation and if the clearance is over 0.35 mm (.014 in) this could create a hard starting situation.

There is two methods to verify rotary valve/cover clearance. One with a 45° feeler gauge, the other one with a solder.

45° Feeler Gauge Method

Remove O-ring from rotary valve cover.

Remove intake manifold from rotary valve cover (except 787 engine).

Reinstall cover in place WITHOUT its O-ring and torque screws to 20 N•m (15 lbf•ft).

Feeler gauge blade from 0.25 mm (.010 in) to 0.35 mm (.014 in) thickness should fit between rotary valve and cover.

Insert feeler gauge blade through cover inlet ports to verify clearance. At least verify clearance at 2 different places in each port.

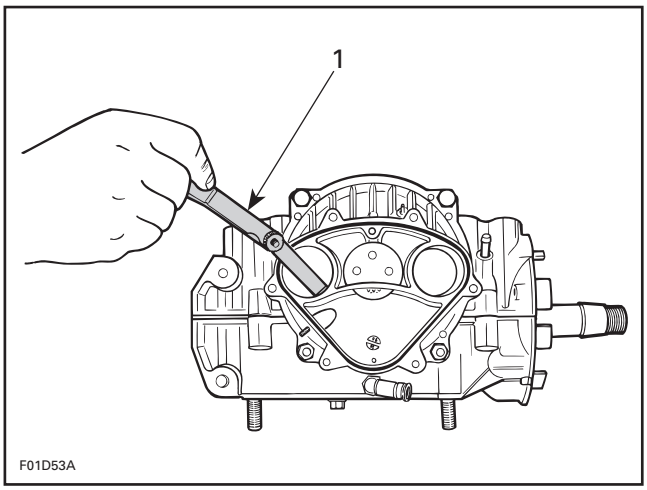

1. 45° feeler gauge

If rotary valve cover clearance is out of specification, machine rotary valve cover seating surface or replace the cover.

Solder Method

Remove O-ring from rotary valve cover.

Use the following type of solder:

– rosin core
– diameter: 0.8 mm (.032 in)
– electronic application (available at electronic stores)

Install 2 solder pieces of 13 mm (1/2 in) long directly on rotary valve, one above and one below rotary valve gear. Apply grease to hold solder in position.

Reinstall cover in place WITHOUT its O-ring and torque screws to 20 N•m (15 lbf•ft).

Remove cover then clean and measure compressed solder thickness, it must be within the specified tolerance 0.30 ± 0.05 mm (.012 ± .002 in).

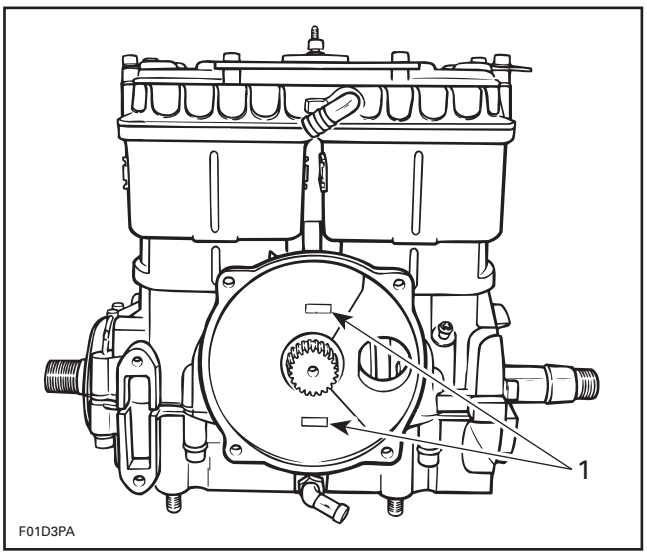

TYPICAL
1. Solder

If rotary valve cover clearance is out of specification, machine rotary valve cover seating surface or replace the cover.

Machining Information

The amount of material over tolerance must be removed from the rotary valve cover seating surface.

Also cut the O-ring groove the same amount to keep the 1.0 ± 0.03 mm (.039 ± .001 in) depth between the bottom of the groove and the seating surface.

Remove burrs on the edges of the seating surface and O-ring groove.

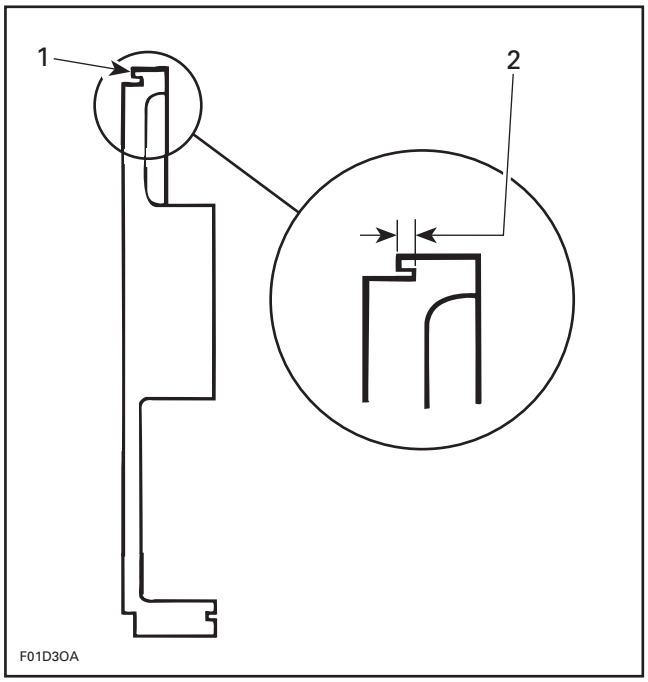

SAME AMOUNT REMOVED FROM COVER SEATING SURFACE AND O-RING GROOVE BASE

1. *Cover seating surface*
2. *O-ring groove depth must be 1.0 ± 0.03 mm (.039 ± .001 in)*

Reverify the clearance.

At assembly the rotary valve timing must remain as per original setting.

NOTE: If rotary valve crankcase surface is worn, it is possible to have it reworked at the factory. Contact your dealer or distributor.

Crankshaft and Rotary Valve Shaft Drive Gears Backlash

Remove PTO flywheel guard.

Remove spark plugs, rotary valve cover and valve.

Manually feel backlash at one position, then turn crankshaft about 1/8 turn and recheck. Continue this way to complete one revolution.

Backlash must be even at all positions. Otherwise, disassemble engine to find which part is faulty (drive gears or rotary valve shaft with excessive deflection).

ROTARY VALVE TIMING

▼ CAUTION

Never use the ridge molded in crankcase as a timing mark.

The following tools are required to measure rotary valve opening and closing angles in relation with magneto side piston.

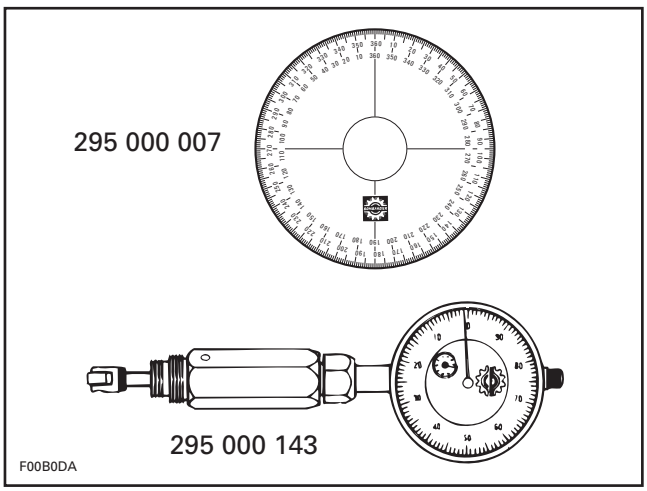

For the following instructions, let's use these specifications as example:

OPENING: 147° BTDC

CLOSING: 65° ATDC

Proceed as follows:

— Turning crankshaft, bring MAG side piston to Top Dead Center using a TDC gauge.

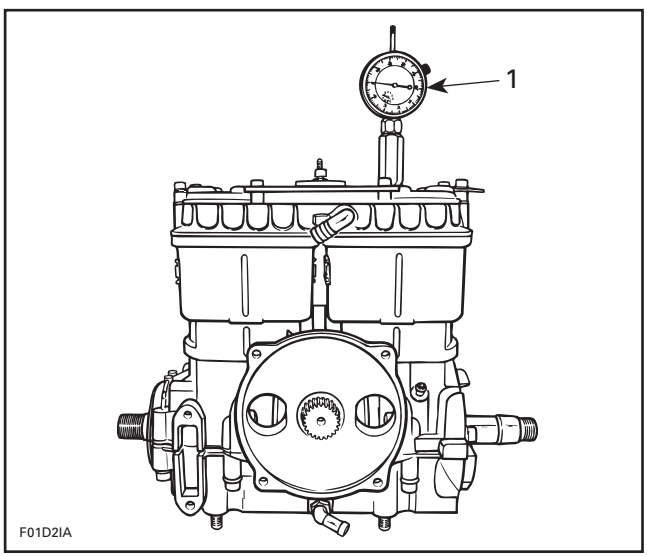

1. *Bring piston to TDC*

For opening mark, first align 360° line of degree wheel with **BOTTOM** of **MAG side** inlet port. Then, find line 147° on degree wheel and mark crankcase at this point.

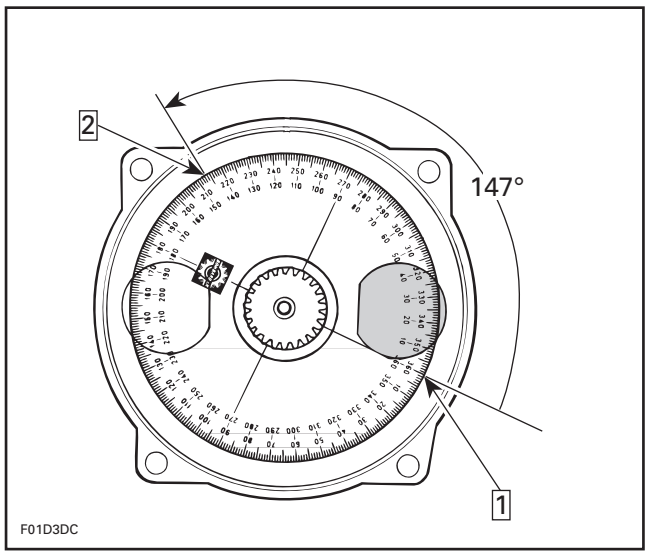

OPENING MARK

Step 1 *: Bottom of MAG inlet port.*
Align 360° line of degree wheel

Step 2 *: Find 147° on degree wheel and mark here*

NOTE: Do not rotate the crankshaft.

For closing mark, first align 360° line of degree wheel with **TOP** of **MAG side** inlet port. Then, find 65° line on degree wheel and mark crankcase at this point.

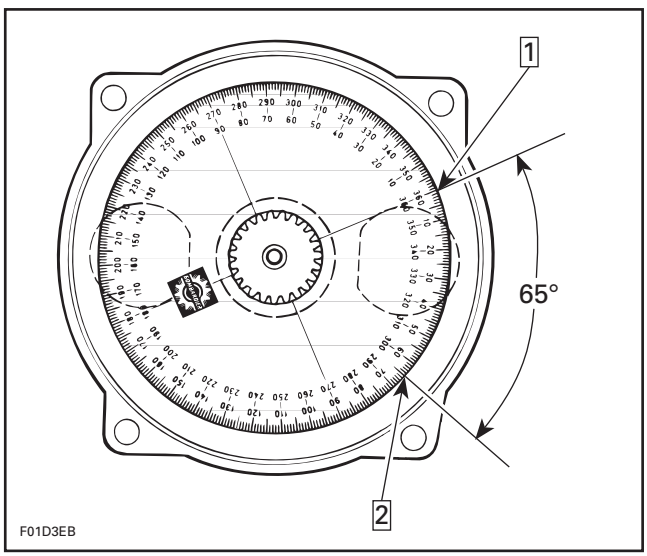

CLOSING MARK

Step 1 *: Top of MAG inlet port.*
Align 360° line of degree wheel

Step 2 *: Find 65° on degree wheel and mark here*

– Remove degree wheel.

Position rotary valve on shaft splines to have edges as close as possible to these marks with the MAG piston at TDC.

NOTE: When checking the timing with the MAG side piston at Top Dead Center, the rotary valve shaft should be lightly held in a clockwise position to take up any gear lash that may be present. The valve is asymmetrical and can be flipped over to obtain a better timing position. There is a possibility that exact timing cannot be reached by this method. When this occurs, the rotary valve shaft may have to be removed and the gear repositioned. Refer to appropriate model year *Shop Manual*. By removing the rotary valve shaft and reinstalling it with the drive gear in a different position with respect to the crankshaft gear and/or valve shaft splines, a different valve position may be established. When a crankshaft rotary valve shaft, or drive gear is removed or replaced, it will be necessary to reverify the timing.

Apply Sea-Doo injection oil on rotary valve surfaces before reassembling rotary valve cover.

– Remove TDC gauge.

Rotary Valve Cover Installation

Install O-ring and cover. When installing O-ring, do not roll O-ring into groove. Instead, place O-ring in groove until it becomes necessary to stretch it to fit (about half way around diameter). Now pull O-ring beyond cover and lay it into groove without twisting or rolling O-ring; then, torque screws to 20 N•m (15 lbf•ft) in a criss-cross sequence.

▼ CAUTION

Crankcase halves must be separated and crankshaft must not be present to install rotary valve shaft assembly in crankcase.

ROTARY VALVE IDENTIFICATION

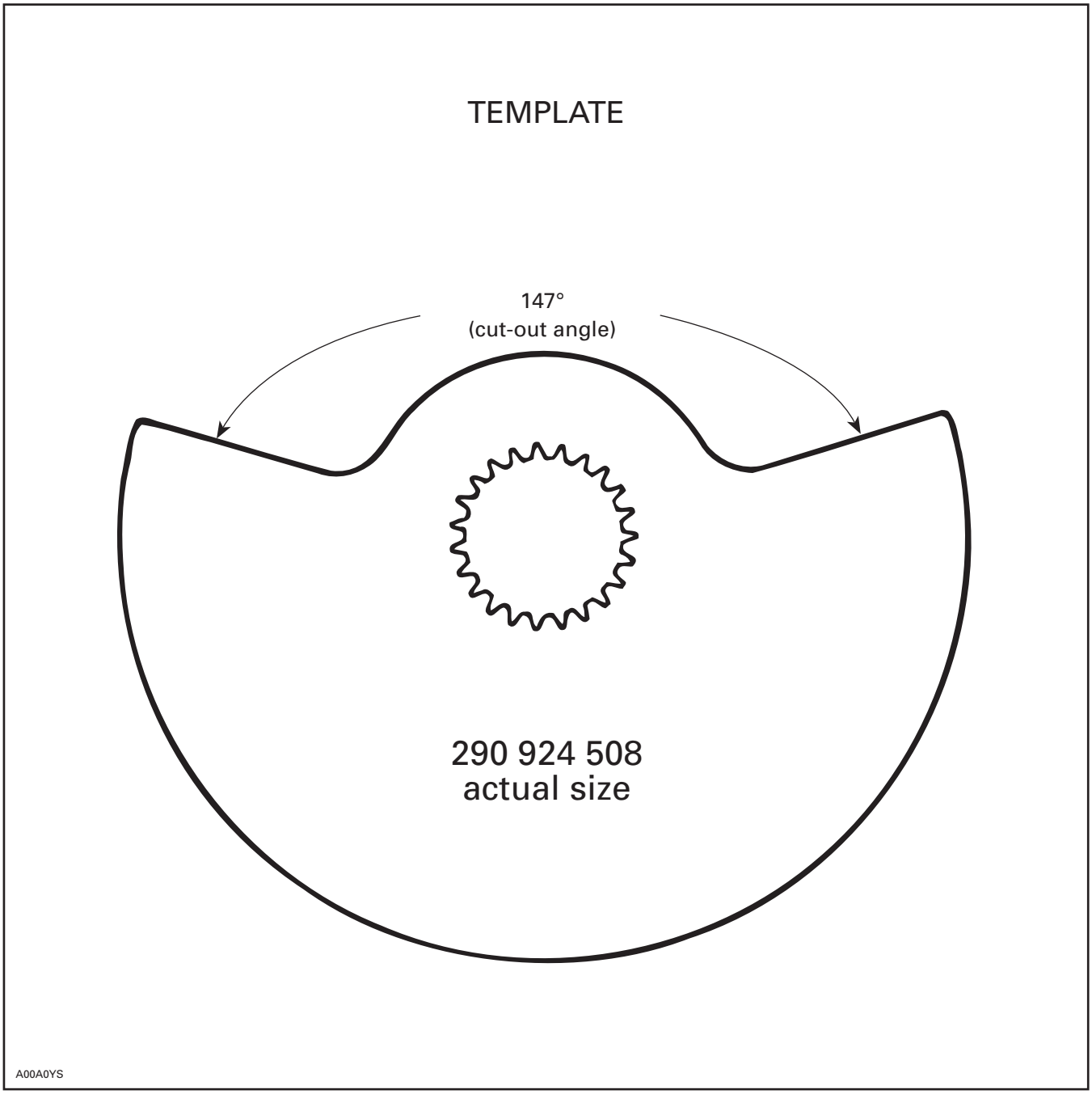

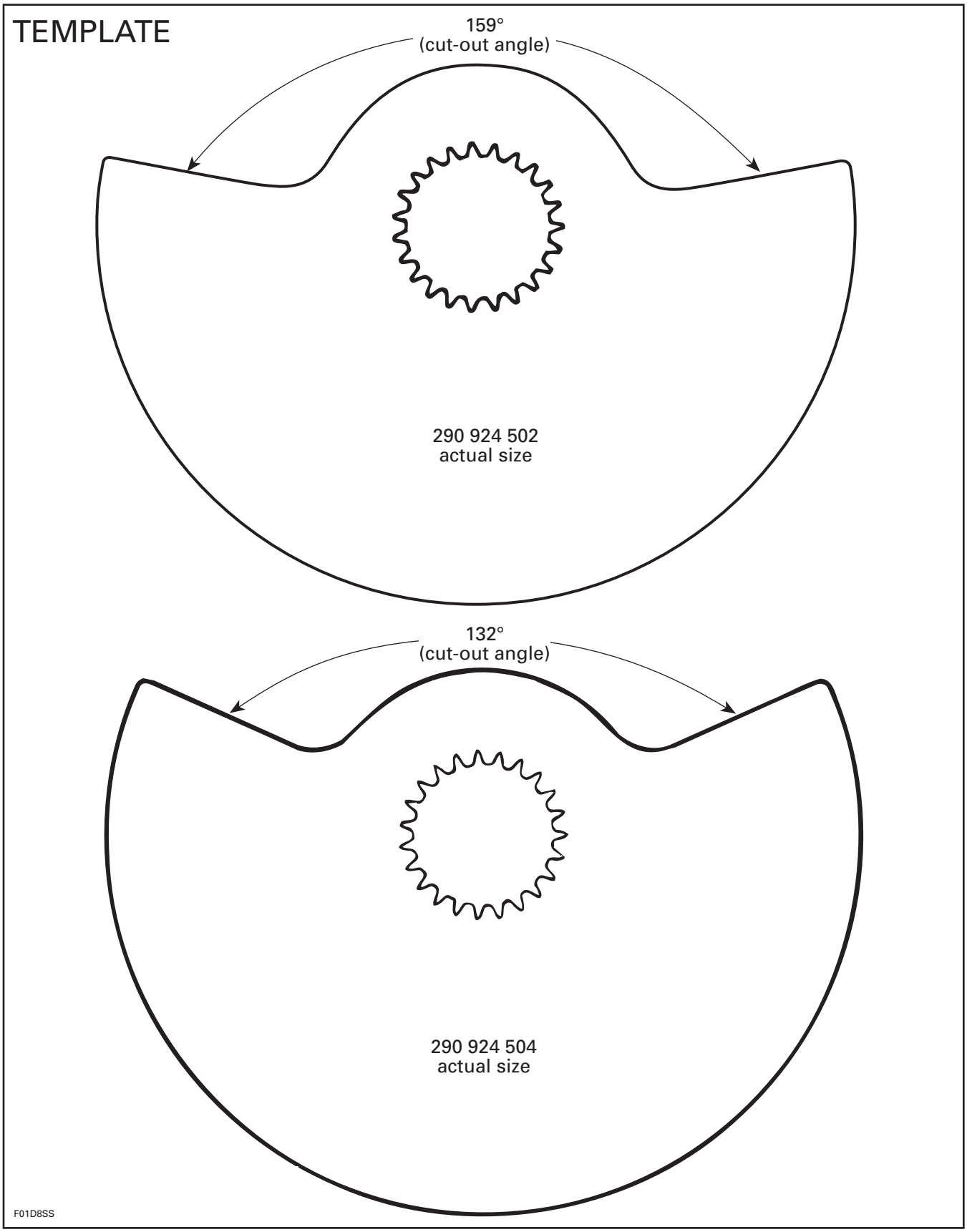
TEMPLATE
159°
(cut-out angle)
290 924 502
actual size
132°
(cut-out angle)
290 924 504
actual size
F01D8SS

CYLINDER PORTING MAPS

NOTE: See tables on next pages for porting map specifications. Refer to the following illustration for measurement references.

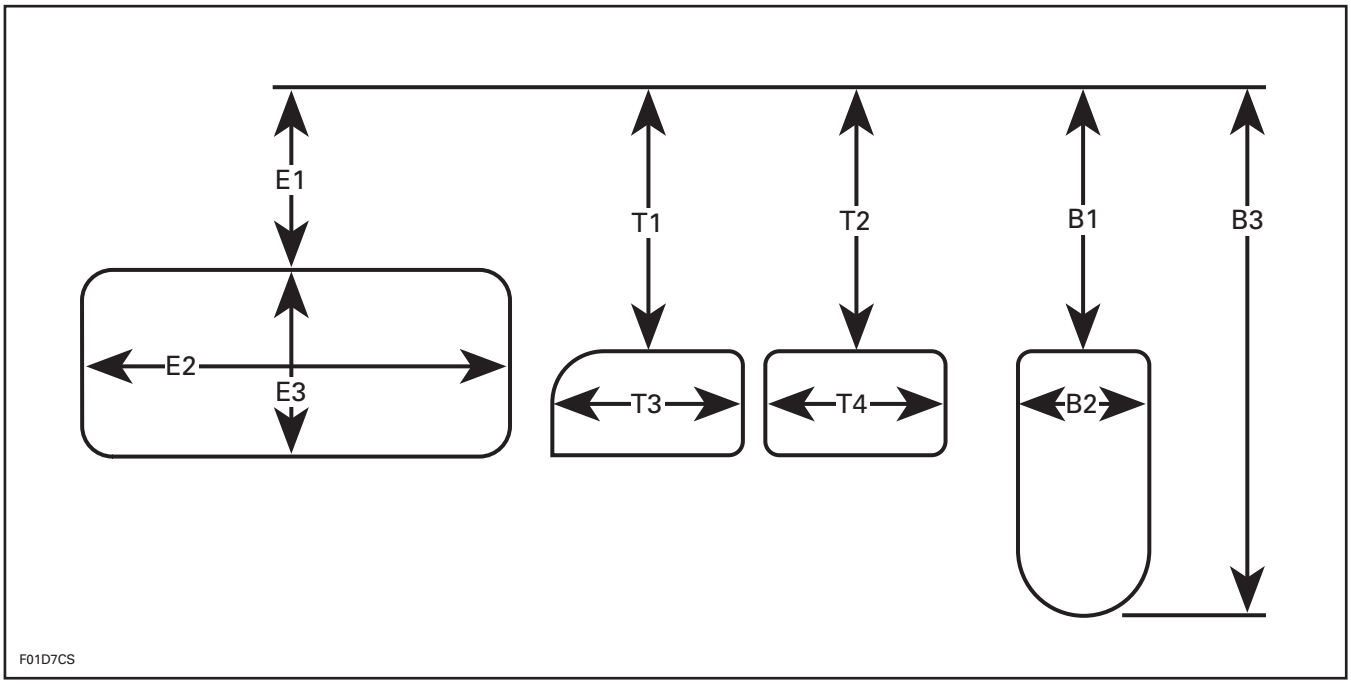

Porting Map for Engines Prior to 1995

SEA-DOO ENGINE SPECIFICATIONS		587	657
Exhaust port height	E1	34.0 mm	34.5 mm
Exhaust port width	E2	50.0 mm	53.0 mm
Exhaust port height bottom to top	E3	34.0 mm	35.0 mm
Rear transfer height	B1	52.0 mm	55.5 mm
Rear transfer width	B2	17.0 mm	20.0 mm
Rear transfer length bottom to top	B3	91.5 mm	97.5 mm
Main transfer height	T1 T2	50.5 mm 51.0 mm	54.0 mm 54.0 mm
Bottom width of main transfers	T3 T4	26.0 mm 21.0 mm	26.0 mm 21.0 mm
Total cylinder height		109.5 mm	113.5 mm
Exhaust outlet width at Y-pipe		49.0 mm	53.0 mm
Exhaust outlet height at Y-pipe		32.0 mm	33.0 mm
Squish band clearance		1.5 mm	1.1 mm
Cylinder head volume (without piston)		40.8 cc	42.2 cc
Combustion chamber volume with .012” base gasket		27.7 cc	29.5 cc
Uncorrected compression ratio		11.5: 1	12.25: 1
Bore		76 mm	78 mm
Stroke		64 mm	68 mm

Porting Map for the 1995 Engines

ENGINE TYPE/MODEL YEAR		587	657	657X	717	787
Exhaust port height	E1	35.0 mm	36.0 mm	34.1 mm	34.2 mm	35.2 mm
Exhaust port width	E2	47.8 mm	50.9 mm	50.9 mm	51.1 mm	54.4 mm
Exhaust port height bottom to top	E3	30.1 mm	33.1 mm	35.1 mm	34.7 mm	39.3 mm
Rear transfer height	B1	54.1 mm	57.5 mm	57.5 mm	59.5 mm	57.3 mm
Rear transfer width	B2	14.8 mm	17.8 mm	17.8 mm	20.1 mm	21.5 mm
Rear transfer height bottom to top	B3	90.8 mm	96.7 mm	96.7 mm	77.1 mm	104.8 mm
Main transfer height	T1 T2	48.1 mm 48.1 mm	54.3 mm 54.3 mm	54.3 mm 54.3 mm	53.6 mm 53.9 mm	58.2 mm 58.6 mm
Bottom width of main transfer	T3 T4	24.1 mm 21.9 mm	24.2 mm 22.3 mm	24.2 mm 22.3 mm	26.5 mm 24.5 mm	28.5 mm 26.5 mm
Total cylinder height		109.4 mm	113.4 mm	113.4 mm	117.8 mm	122.5 mm
Exhaust outlet width at Y-pipe		49.0 mm	53.0 mm	53.0 mm	53.0 mm	56.0 mm
Exhaust outlet height at Y-pipe		32.0 mm	33.0 mm	33.0 mm	33.0 mm	36.0 mm
Squish band clearance		1.5 mm	1.1 mm	1.1 mm	1.5 mm	1.5 mm
Cylinder head volume (without piston)		40.8 cc	42.2 cc	37.9 cc	42.2 cc	48.5 cc
Combustion chamber volume with .012” base gasket		27.7 cc	28.9 cc	28.9 cc	32.7 cc	36.4 cc
Uncorrected compression ratio		11.5: 1	12.25: 1	12.25: 1	12.25: 1	11.75: 1
Bore		76 mm	78 mm	78 mm	82 mm	82 mm
Stroke		64 mm	68 mm	68 mm	68 mm	74 mm

Porting Map for the 1996 through 1998 Engines

ENGINE TYPE/MODEL YEAR		587	717	787	947
Exhaust port height	E1	33.4 mm	32.4 mm	34.6 mm	38.70 mm
Exhaust port width	E2	50.0 mm	51.3 mm	54.4 mm	69.30 mm
Exhaust port height bottom to top	E3	32.3 mm	34.7 mm	38.4 mm	40.50 mm
Boost port height	B1	52.5 mm	55.0 mm	56.7 mm	61.30 mm
Boost port width	B2	17.0 mm	25.0 mm	22.0 mm	18.60 mm
Boost port length bottom to top	B3	38.2 mm	40.0 mm	104.5 mm	87.20 mm
Main transfer height	T1 T2	49.5 mm 49.5 mm	51.8 mm 51.8 mm	56.7 mm 56.7 mm	61.20 mm 61.10 mm
Main transfer width at bottom	T3 T4	20.0 mm 21.0 mm	25.0 mm 20.0 mm	28.7 mm 22.8 mm	30.60 mm 29.80 mm
Total cylinder height		109.6 mm	114.3 mm	122.0 mm	124.50 mm
Exhaust outlet height at Y-type		49.0 mm	53.0 mm	56.0 mm	64.40 mm
Exhaust outlet width at Y-type		32.0 mm	33.0 mm	36.0 mm	37.70 mm
Squish band clearance		1.5 mm	1.5 mm	1.4 mm	1.70 mm
Cylinder head volume		40.0 cc	42.4 cc	47.7 cc	51.30 cc
Combustion chamber volume with 0.012 in base gasket		27.7 cc	32.6 cc	36.3 cc	45.30 cc
Uncorrected compression ratio		11.5-1	12.0-1	11.75-1	11.50-1
Bore		76 mm	82 mm	82 mm	88 mm
Stroke		64 mm	68 mm	74 mm	78.20 mm

787 ENGINE MODIFICATIONS

Superstock Modifications

In the following pages are recommended for modifying Superstock race craft. In addition to the modifications to the original equipment parts shown other modifications are necessary. These additional modifications include, but are not limited to:

- Dual 46mm carburetors
- Mikuni 72 liter per hour fuel pump
- Primer kit
- Modified or aftermarket intake manifold
- Free flowing flame arresters
- Modified or aftermarket exhaust system
- Ignition enhancer
- Aftermarket intake grate
- Aftermarket ride plate
- Aftermarket steering system
- Aftermarket throttle & switch assembly
- Lightweight PTO
- Aftermarket pump nozzle with assorted sizing rings
- Aftermarket steering nozzle
- Aftermarket thrust cone
- Assortment of aftermarket impellers
- Cable or hydraulic operated trim system
- Aftermarket sponsons
- Heavy duty battery
- Heavy duty battery cables
- Bilge pump

Porting Specifications

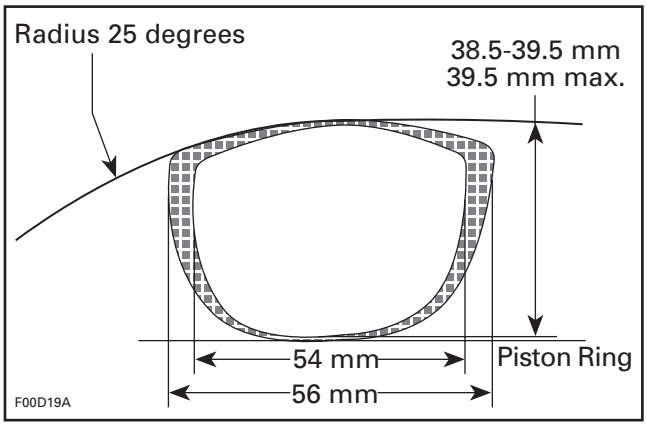

EXHAUST PORT

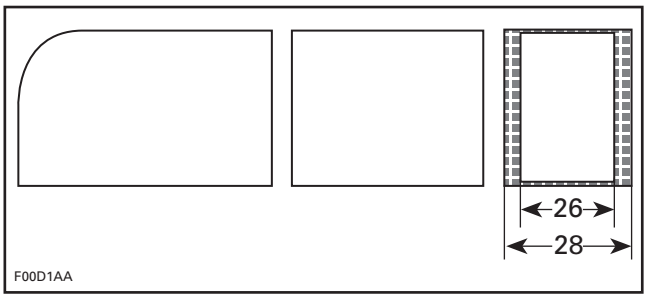

BOOST PORT

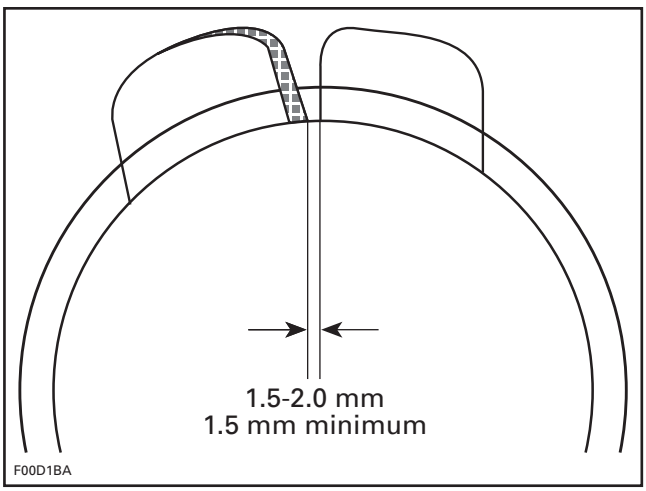

TRANSFER PORTS

Cylinder Displacement and Compression Ratio Calculation

Bore = 82.00 mm

Stroke = 74.00 mm

Combustion Chamber Volume = 36 cc

Displacement Calculation

$$\frac{\pi \times R^2 \times S}{1000} = \text{CC's}$$

3.14 Times the radius squared (mm) times the stroke (mm) divided by 1000

Radius is 1/2 the bore diameter

Radius = 41 mm (41 x 41 = 1681)

Radius squared 1681 x π (3.14 (pi)) = 5278.34

5278.34 x 74 (stroke) = 390597.16 mm^3
(mm^3 = cubic millimeters)

390597.16 divided by 1000 = 390.597 cc's

$$\frac{\pi \times 41^2 \times 74}{1000} = 390.597 \text{ cc's}$$

Multiply by the number of cylinders:
390.597 x 2 = 781.194 cc's

Compression Ratio Calculation

$$\frac{\text{Combustion Chamber Volume} + \text{Cylinder Volume}}{\text{Combustion Chamber Volume}} = \text{Theoretical Compression Ratio}$$

Combustion Chamber Volume = 36 cc

Cylinder Volume = 390 cc

$$\frac{36 \text{ cc} + 390 \text{ cc}}{36 \text{ cc}} = 11.8$$

36 cc + 390 cc (Cylinder Volume) = 426 cc

426 cc ÷ 36 cc = 11.8: 1 Compression Ratio

Compression Ratio Calculation

$$\frac{\text{Combustion Chamber Volume} + \text{Cylinder* Volume}}{\text{Combustion Chamber Volume}} = \text{Corrected Compression Ratio}$$

* Cylinder volume with the piston just closing the exhaust port

Increasing Compression Ratio

To increase compression you must mill the head 3 millimeters from the plain surface and rework the squish area to a diameter of 83 millimeters with an inclination of 14 degrees.

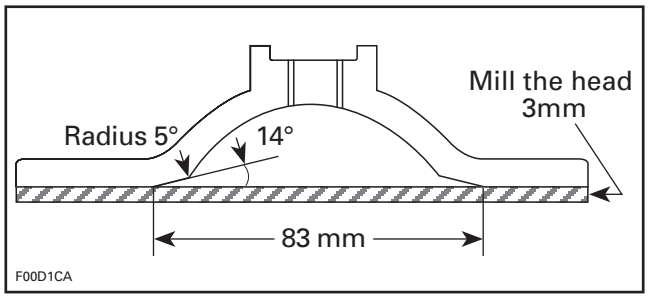

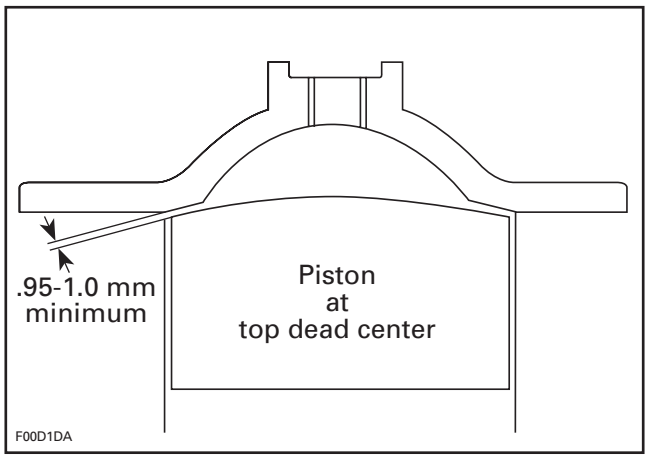

THIS MODIFICATION REQUIRES THE USE OF HIGH OCTANE RACE FUEL!

Intake Manifold Modification

Using a portion tool, modifications shown in the illustration.

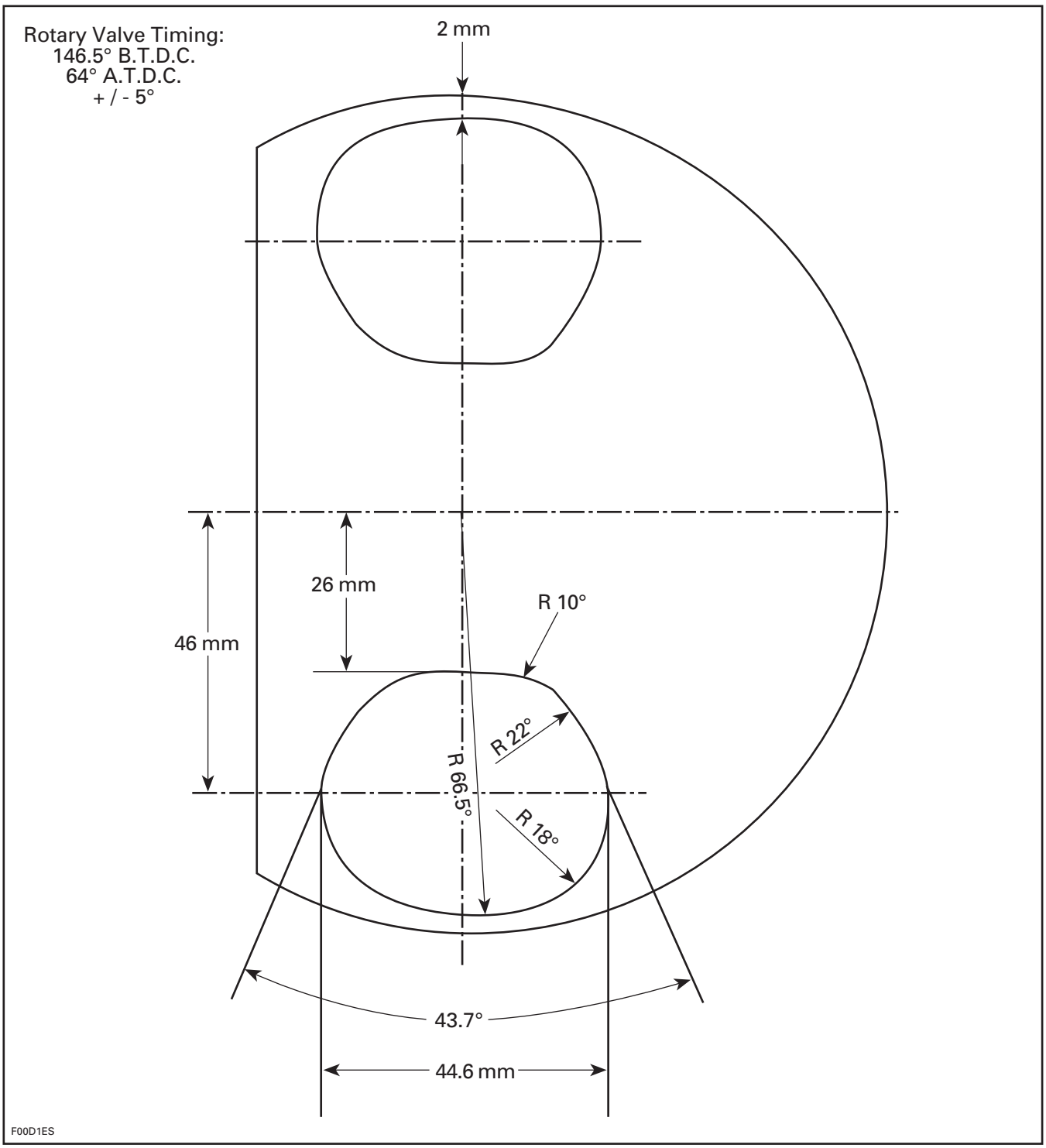

Exhaust Manifold Modification

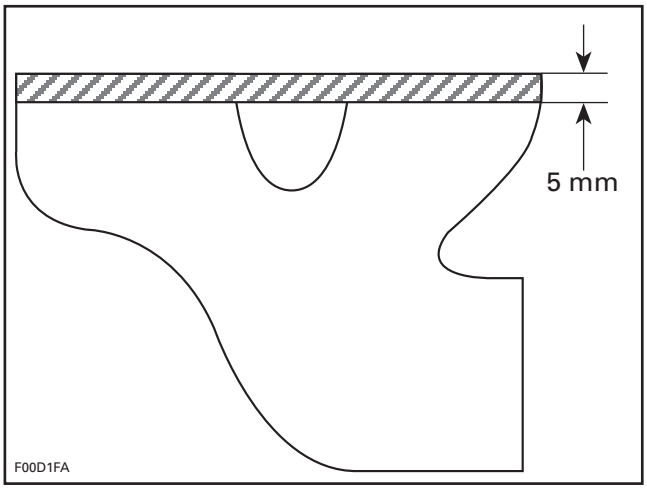

Using a mill, remove 5 millimeters for the cylinder side of the exhaust manifold. The suggested exhaust system is a Factory Pipe using the variable water control system.

947 ENGINE MODIFICATIONS

RAVE Valve Operation

On the 947 the RAVE valves are controlled by the MPEM (Multi-purpose Electronic Module). The MPEM measures two factors to control the RAVE valves: engine RPM and its rate of acceleration.

To open the RAVE valves the MPEM activates a solenoid which directs crankcase pressure to the valves. The pressure that is received from the crankcase passes through a check valve, allowing only pressure, not vacuum to act on the RAVE valve. To close the RAVE valve the solenoid closes the passageway between the solenoid and valves causing them to close.

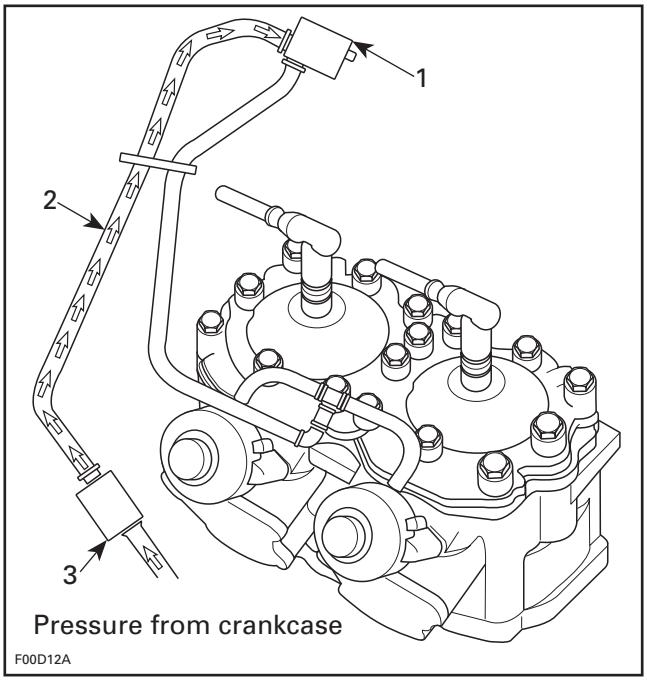

TYPICAL — RAVE VALVE CLOSED

1. *Solenoide deactivated*
2. *Crankcase pressure*
3. *Check valve*

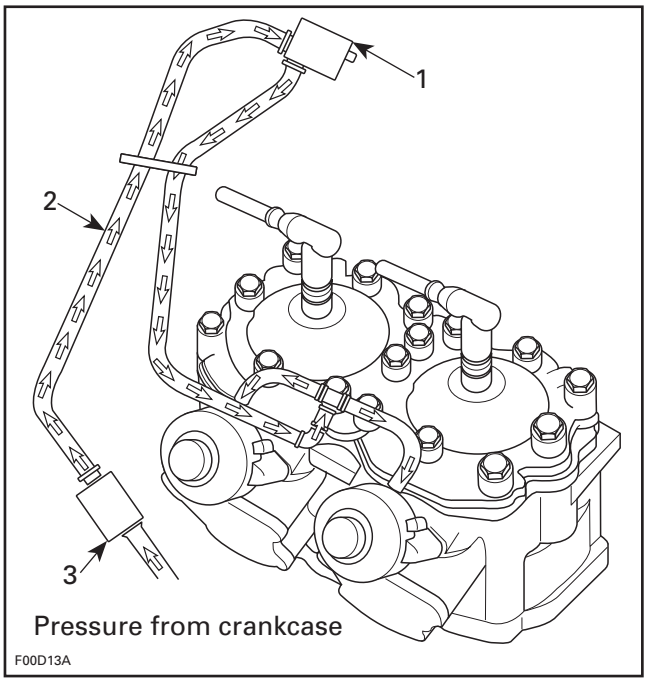

TYPICAL — RAVE VALVE OPEN

1. *Solenoide activated*
2. *Crankcase pressure*
3. *Check valve*

Increasing Compression Ratio

Machine the cylinder head to the dimensions shown in the illustration. This modification results in a compression ratio of 14:1.

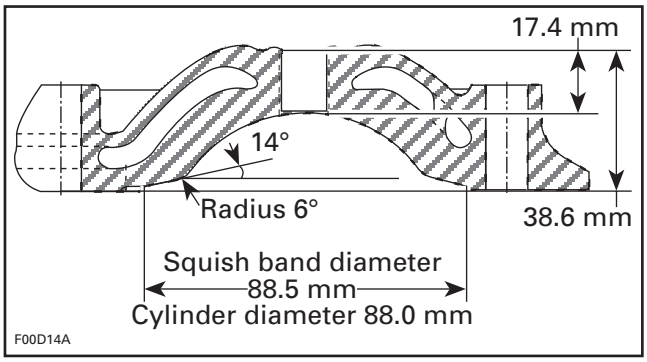

THIS MODIFICATION REQUIRES THE USE OF HIGH OCTANE RACING FUEL!

The compression ratio of 14:1 is obtained by the modification of the cylinder head and milling 1.8 mm from the top of the cylinder.

Squish band clearance: .95 to 1.00 mm MINIMUM.

Cylinder Modification

Machine 1.8 mm from the top of the cylinder.

Using a porting tool, modify the exhaust and transfer ports as outlined in the chart below.

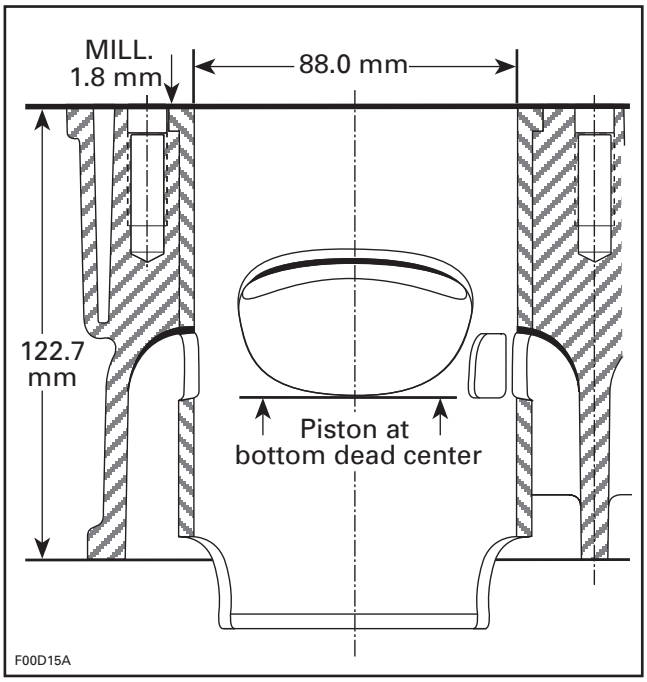

PORT	STOCK	MODIFIED
EXHAUST	41.2 mm	41.8 mm
TRANSFER	18.0 mm	19.0 mm

ALL MEASUREMENTS ARE MADE FROM THE OUTER EDGE OF THE PISTON AT BOTTOM DEAD CENTER.

Intake Modification

Using a porting tool, modify the engine case intake port as shown in the illustration by removing the area that is blacked out.

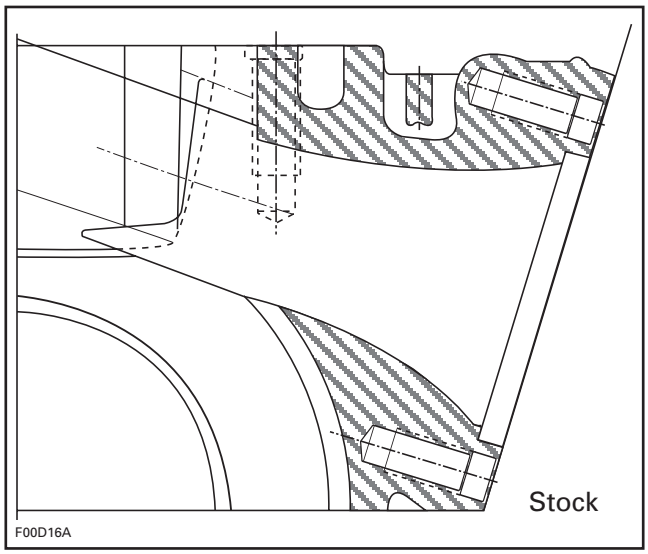

STOCK

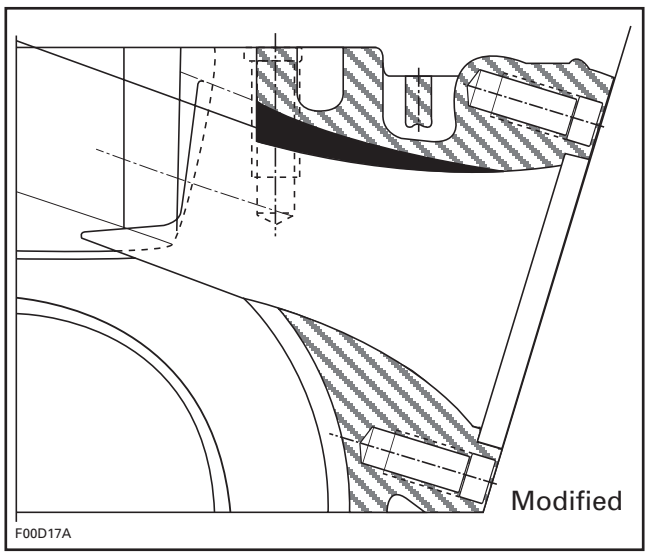

MODIFIED

IT IS ***VERY IMPORTANT*** TO MAKE BOTH INTAKE PORTS SYMMETRICAL AND THE SAME VOLUME TO INSURE EQUAL INTAKE VELOCITY AND VOLUME TO BOTH CYLINDERS.

Exhaust System Modification

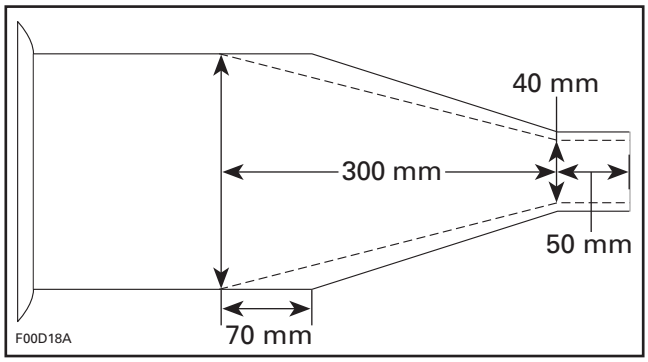

Modify the exhaust system as shown in the illustration. This modification may be used in lieu of an aftermarket system and yields an increase in performance.

ENGINE LEAKAGE TEST

All Engines Except 947

General

A Sea-Doo Engine Leak Test Kit (P/N 295 500 352) is available to help diagnose engine problems such as engine seizure, poor performance, oil leakage, etc.

Before disassembling any components of the engine, it is important to perform a leakage test to determine which part is defective.

It is also very important after servicing the engine, even for a complete engine rebuilt, to perform another leakage test; at this stage, it may avoid further engine problems and minimizing the risk of having to remove and reinstall the engine again.

Static bench testing is the most effective way to conduct a leakage test. Inboard testing does not allow complete access to, and observation of all engine surfaces and should be avoided whenever possible.

On some twin cylinder engines, cylinders can not be verified individually due to leakage from one cylinder to another through a common intake manifold.

When installing hoses of the Engine Leak Test Kit, use the collars provided in the kit to ensure a proper sealing.

When pressurizing the engine, first confirm that the components of the Engine Leak Test Kit are not leaking by spraying a solution of soapy water on all hoses, connections, fittings, plates, etc. If there is a leak, bubbles will indicate leak location.

Three areas of the engine will be tested in sequence as per the diagnostic flow chart (on page 03-38).

1. Engine Cooling System
2. Bottom End and Top End
3. Rotary Valve Shaft

NOTE: If a leak is found, it is important to continue testing as there is the possibility of having more than one leak. Continue pumping to compensate for the air lost to find another leak.

Bench Testing Procedure

Engine Cooling System

Remove the exhaust manifold gasket and ensure the surface is cleaned.

Install the appropriate exhaust manifold plate (**no. 1** for the 787 engine and **no. 2** for other engines except the 947) from the Engine Leak Test Kit. Tighten plate using fasteners provided in the kit.

Use hoses provided in the kit and install them on the engine.

Install pump using reducer and appropriate tube(s) as necessary.

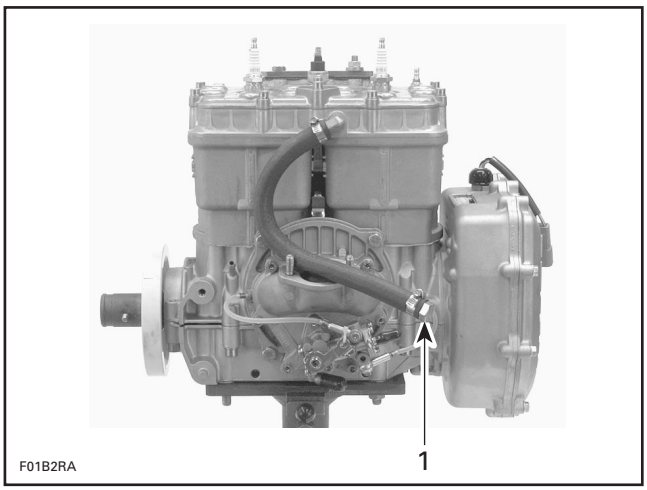

587 ENGINE

1. Plug hose using a bolt and clamps

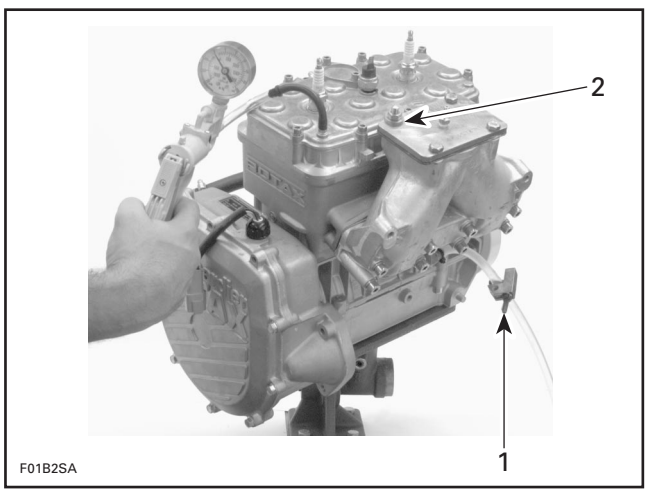

587 ENGINE

1. Plug exhaust manifold drain hose with a pincher
2. Use 2 washers with exhaust manifold stud

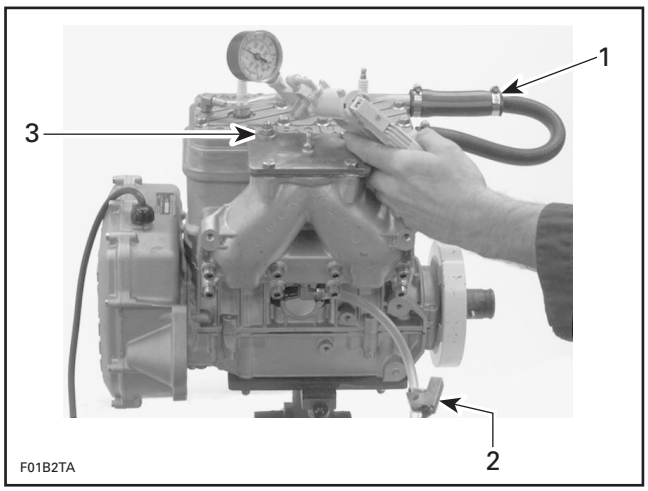

657 ENGINE

1. *Insert small hose inside large hole. Secure with clamps*
2. *Plug exhaust manifold drain hose with a pincher*
3. *Use 2 washers with exhaust manifold stud*

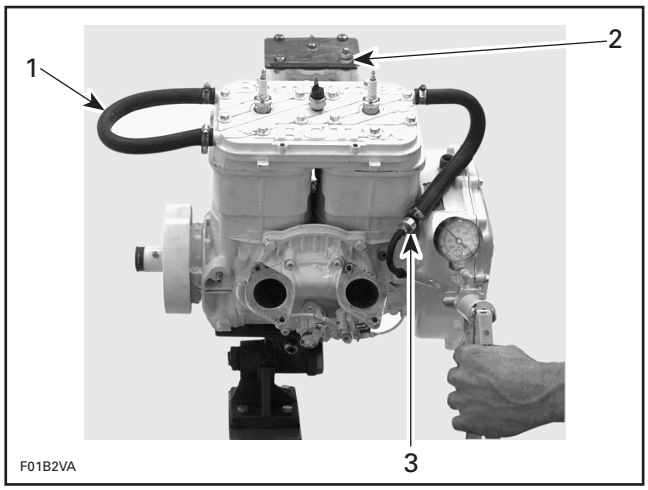

717 ENGINE — FRONT VIEW

1. *Loop hose and use clamps*
2. *Use 2 washers with exhaust manifold stud*
3. *Hose with adapter and nipple*

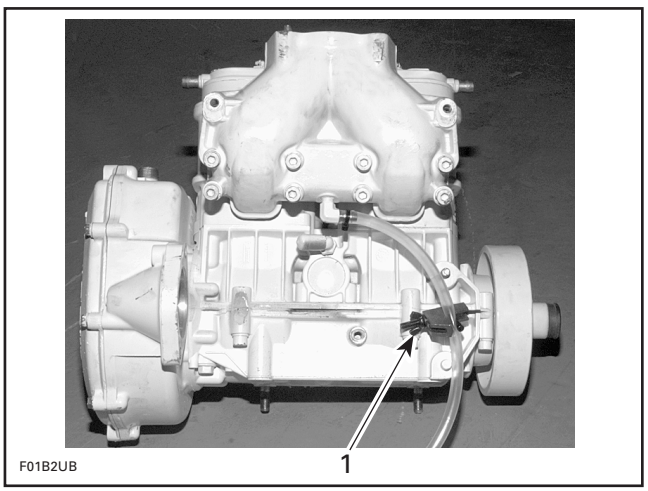

717 ENGINE — REAR VIEW

1. *Engine drain hose blocked with a hose pincher*

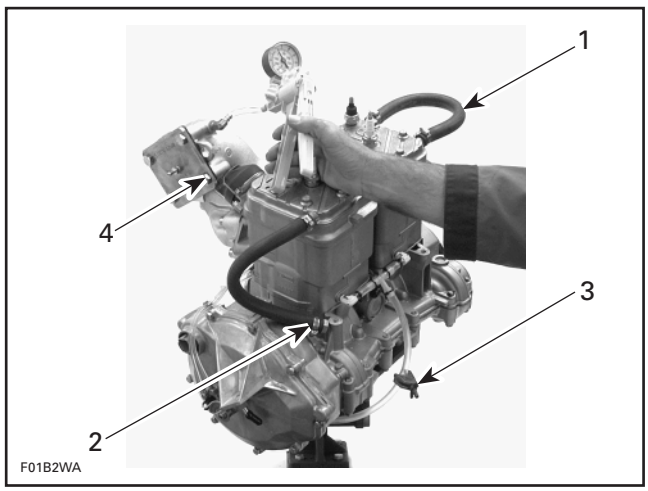

787 ENGINE

1. *Loop hose and use clamps*
2. *Hose with clamps. Plug end with a screw*
3. *Block engine drain hose with a hose pincher*
4. *Use 2 washers with exhaust manifold stud*

NOTE: Water is not required for testing.

Activate pump and pressurize engine cooling system to 34 kPa (5 PSI).

Wait 3 minutes and check if pressure drops; if so, verify all testing components.

– If kit components are not leaking and pressure drops, verify all external jointed surfaces, temperature sensor and the O-ring between the spark plug area and the engine cylinder head cover. If none of these components are leaking, there is an internal leak and it can be detected with **Bottom End and Top End** testing.

Bottom End and Top End

Remove the carburetor(s) and gasket(s). Make sure the surface of the intake manifold (587, 657 and 717 engines) or rotary valve cover (787 engine) are clean.

Install the intake plate(s) **no. 3** with fasteners from the kit and tighten adequately.

On engines with the RAVE system, remove the RAVE valves and gaskets.

Install plates **no. 4** with fasteners from the kit and tighten adequately.

NOTE: On engines with the RAVE system, the boot and O-ring can be checked for leakage with the valve in place. Simply remove the cover to expose the boot.

Make sure the spark plugs are installed and tighten.

Block pulse hose using a hose pincher.

NOTE: Do not block the rotary valve shaft hoses.

Install pump to the exhaust plate fitting.

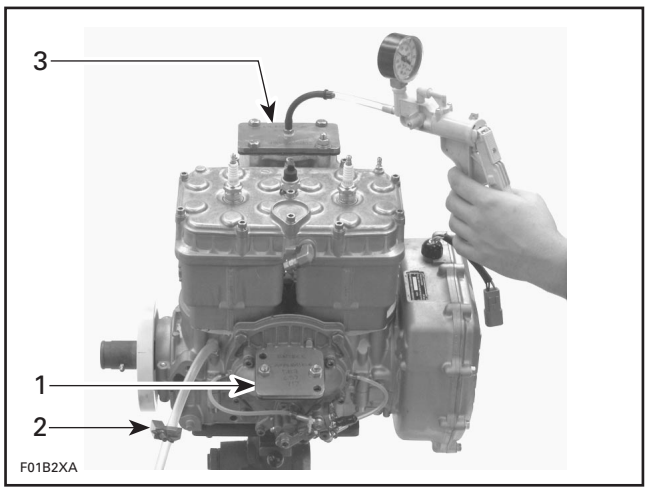

587 ENGINE

1. *Intake plate*
2. *Plug pulse hose with a pincher*
3. *Exhaust plate*

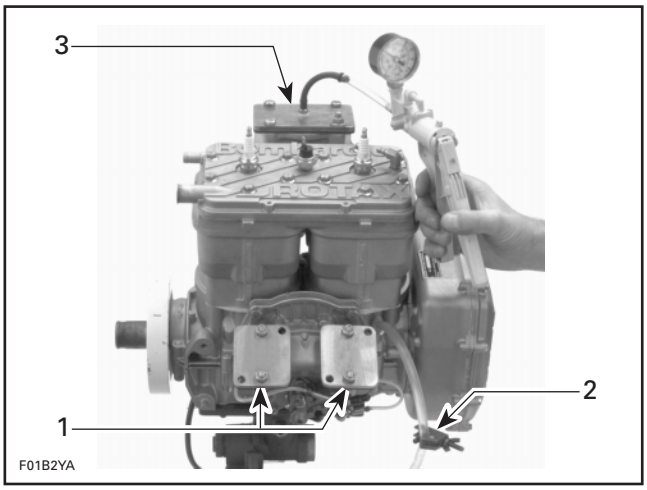

657 ENGINE

1. *Intake plates*
2. *Plug pulse hose with a pincher*
3. *Exhaust plate*

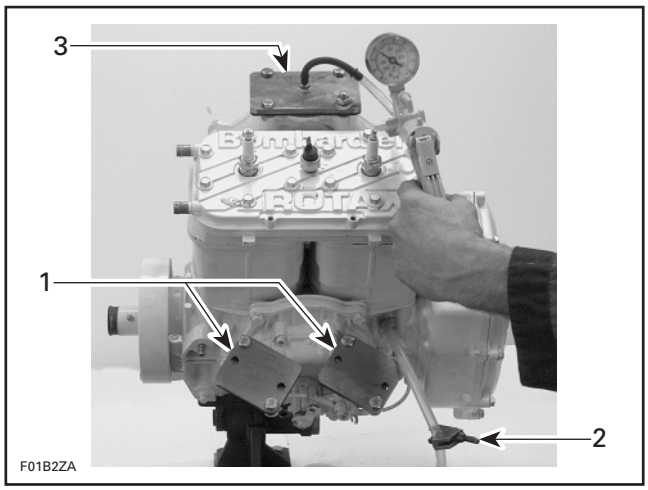

717 ENGINE

1. *Intake plates*
2. *Pulse hose blocked with a pincher*
3. *Exhaust plate*

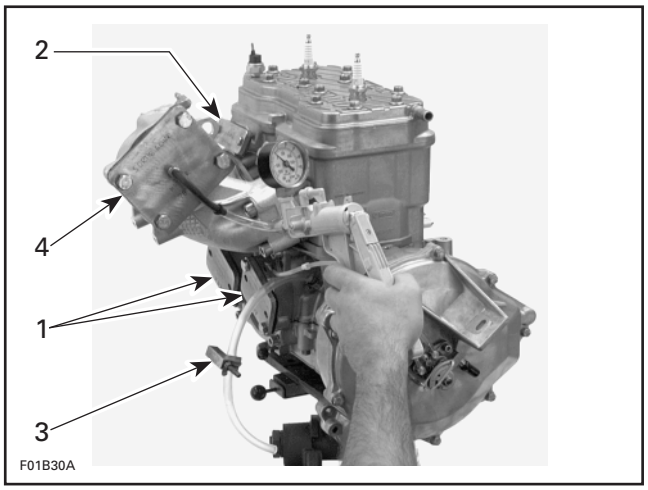

787 ENGINE

1. *Intake plates*
2. *RAVE valve plates*
3. *Pulse hose blocked with a pincher*
4. *Exhaust plate*

Activate pump and pressurize engine to 34 kPa (5 PSI).

▼ CAUTION

Do not exceed this pressure.

Wait 3 minutes and check if pressure drops; if so, verify all testing components.

If kit components are not leaking, verify engine jointed surfaces as per following areas:

– spark plugs
– cylinder head gasket
– cylinder base gasket
– crankcase halves
– rotary valve cover
– engine plugs
– exhaust manifold
– intake manifold (except 787 engine)
– oil injection pump (except 787 engine)

Check also small oil injection pump lines and fittings; check for air bubbles or oil column going toward pump, which indicate a defective check valve.

If the above mentioned components are not leaking, block both oil hoses of the rotary valve shaft using hose pinchers.

NOTE: If leakage stops at this point, proceed with **Rotary Valve Shaft** testing.

If there is still some leakage, remove the PTO flywheel to verify outer seal.

If no leak is found on the PTO side outer seal, remove magneto flywheel and verify crankshaft outer seals.

Proceed with the **Rotary Valve Shaft** testing if the crankshaft outer seals are not leaking.

Rotary Valve Shaft

NOTE: It is preferable to drain the injection oil from the rotary valve shaft, but it is not mandatory.

Block oil return hose of the rotary valve shaft with a hose pincher.

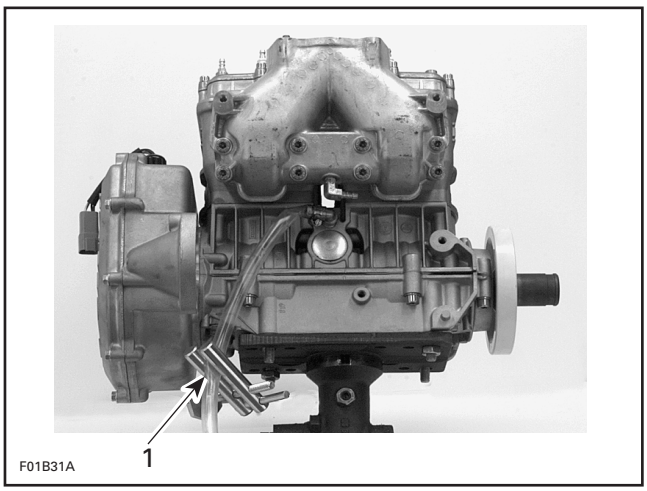

587, 657 AND 717 ENGINES

1. *Oil return hose blocked with a pincher*

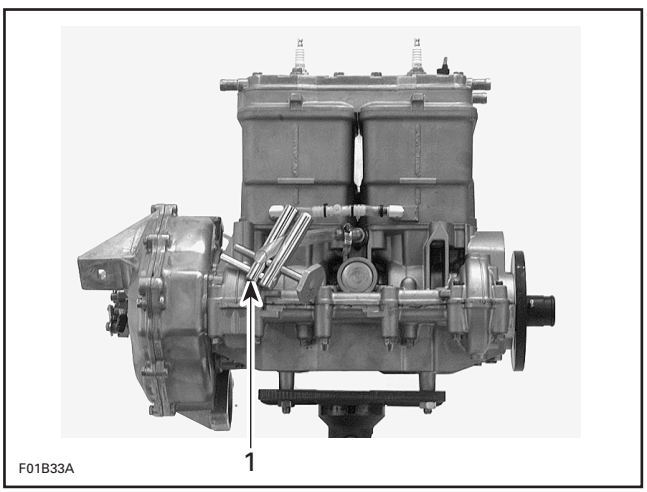

787 ENGINE

1. *Oil return hose blocked with a pincher*

Install pump with reducer and nipple to the oil supply hose of the rotary valve shaft.

587, 657 AND 717 ENGINES

1. Pump with reducer and nipple

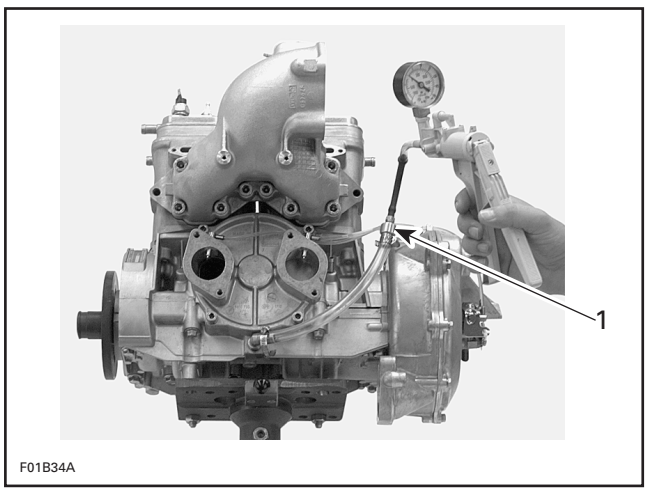

787 ENGINE

1. Pump with reducer and nipple

Activate pump and pressurize to 5 PSI (34 kPa).

Check plug of the rotary valve shaft in crankcase.

Remove PTO side spark plug. If pressure drops, it indicates a defective PTO side crankshaft inner seal.

Remove MAG side spark plug. If pressure drops, it indicates a defective MAG side crankshaft inner seal.

If the above mentioned components are not leaking and there is a pressure drop, remove the rotary valve cover. Check the seal of the rotary valve shaft.

If the rotary valve shaft is not leaking, it could indicate a defective engine casting. Disassemble engine and carefully check for defects in castings. Pay attention to tapped holes which may go through sealed areas of engine and thus lead to leakage.

ENGINE LEAKAGE DIAGNOSTIC FLOW CHART

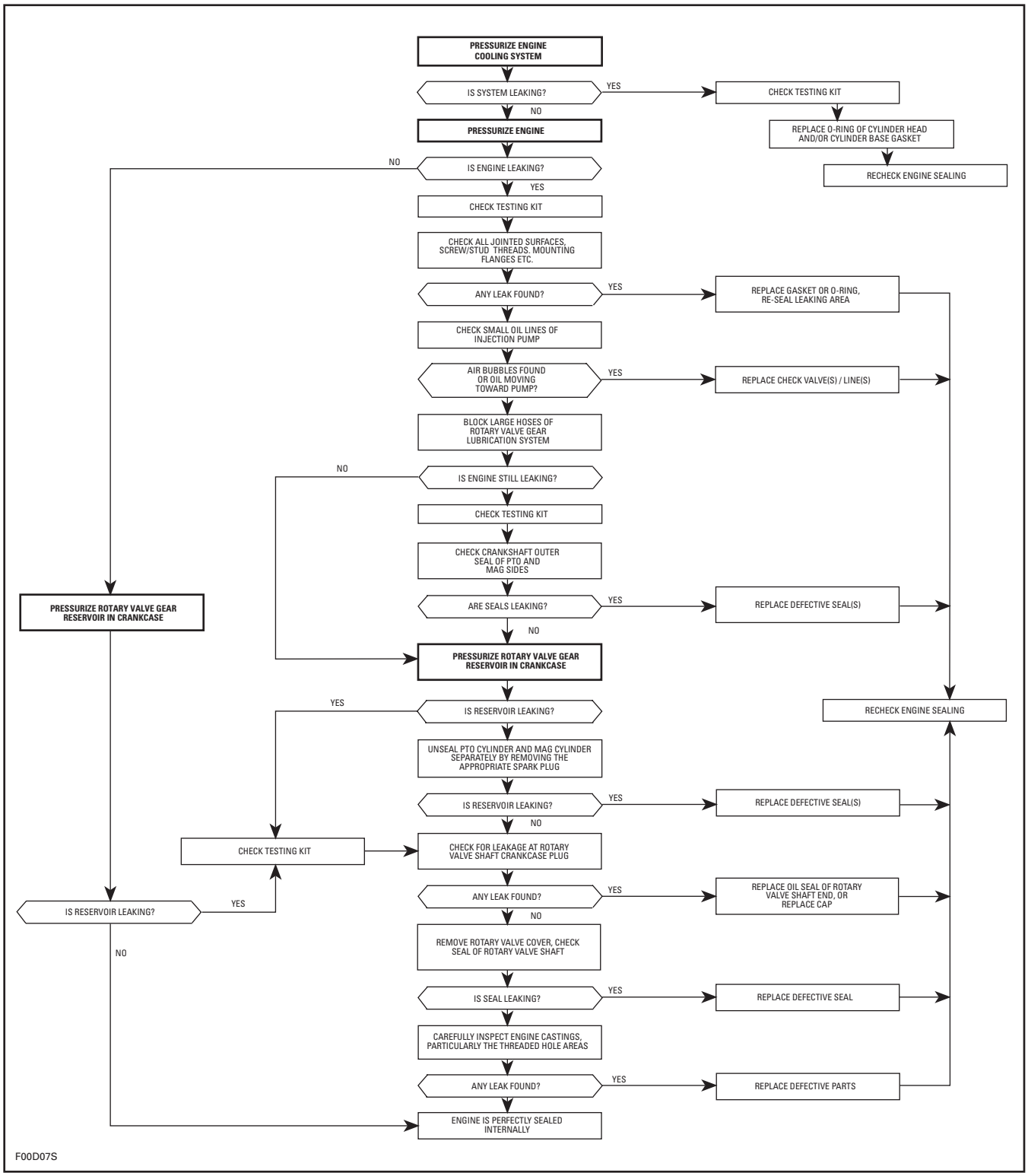

CRANKSHAFT INSPECTION

Crankshaft Misalignment and Deflection

Since it is an assembled crankshaft, it can become misaligned or deflected. Crankshaft can be twisted on center main journal, changing timing of one cylinder in relation with the other, also changing the ignition timing for the PTO cylinder, and the rotary valve timing for the MAG cylinder.

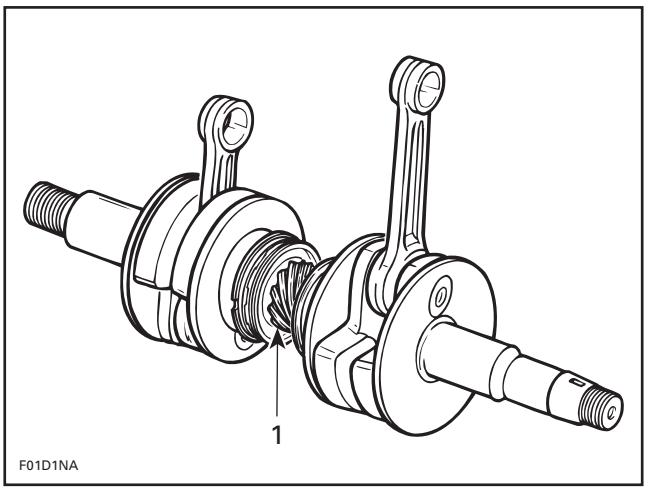

1. Main journal alignment here

Counterweights can also be twisted on connecting rod journal on any or both cylinders.

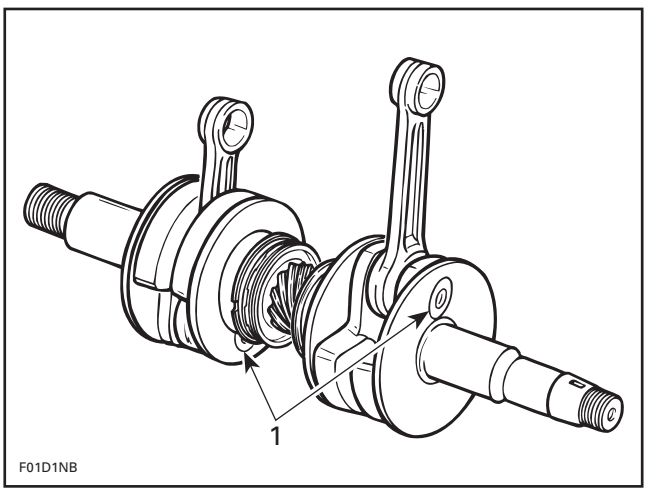

1. Connecting rod journal alignment here

Crankshaft Alignment at Center Main Journal

To accurately check crankshaft alignment, proceed as follows:

– Remove magneto housing cover.

– Remove MAG flywheel nut (and also the magneto rotor for the 787 engine).

– Install Bombardier degree wheel (P/N 295 000 007) on crankshaft end. Hand-tighten nut only.

– Remove both spark plugs.

– Install a TDC gauge (P/N 295 000 143) in spark plug hole on MAG cylinder side.

– Bring MAG piston at Top Dead Center.

– As a needle pointer, secure a wire with a cover screw and a washer.

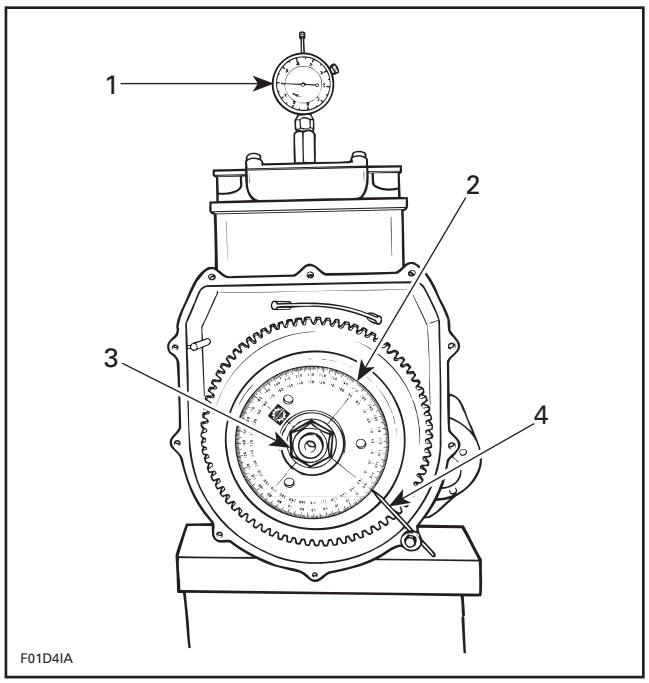

1. TDC gauge
2. Degree wheel
3. Hand tighten nut
4. Needle pointer

– Rotate degree wheel (NOT crankshaft) so that needle pointer reads 360°.

– Remove TDC gauge and install on PTO side.

– Bring PTO piston at Top Dead Center.

Interval between cylinders must be exactly 180° therefore, needle pointer must indicate 180° on degree wheel (360° – 180° = 180°).

Any other reading indicates a misaligned crankshaft.

Crankshaft Alignment at Connecting Rod Journal

Crankshaft misalignment at connecting rod journal may cause the crankshaft to be hard to manually turn. Verification can be done by measuring deflection at each end of crankshaft. Refer to INSPECTION in this section.

If deflection is found to be greater than specified tolerance, this indicates worn bearing(s), bent and/or misaligned crankshaft.

For engine disassembly procedure, refer to appropriate model year *Shop Manual*.

Inspection

Visually inspect parts for corrosion damage.

Inspect crankshaft bearings. Check for scoring, pitting, chipping or other evidence of wear. Make sure plastic bearing retainer cage is not melted. Rotate and make sure bearings turn smoothly.

If crankshaft and/or components are found worn or damaged, it must be replaced or repaired by a shop specializing in this type of work.

The inspection of engine crankshaft should include the following measurements:

	TOLERANCES		
MEASUREMENTS	NEW PARTS (min.)	(max.)	WEAR LIMIT
Crankshaft deflection	0	0.05 mm (.002 in)	0.08 mm (0031 in)
Connecting rod big end axial play	0.39 mm (.015 in)	0.737 mm (029 in)	1.2 mm (047 in)

Connecting Rod Straightness

Align a steel ruler on edge of small end connecting rod bore. Check if ruler is perfectly aligned with edge of big end.

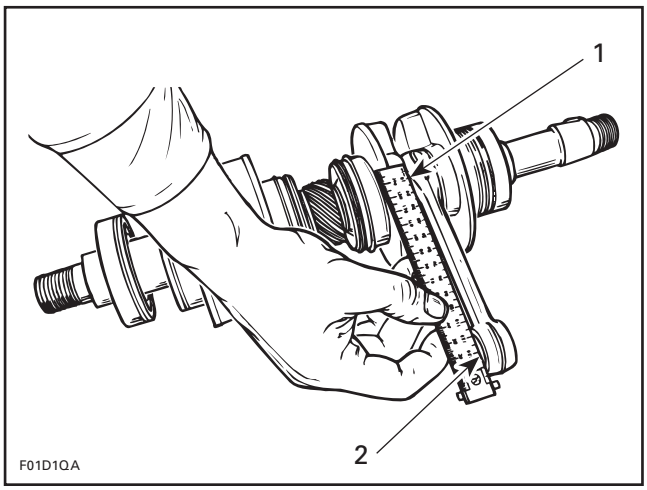

1. *Ruler must be aligned with edge of connecting rod here*
2. *Align ruler here*

Crankshaft Deflection

Crankshaft deflection is measured at each end with a dial indicator.

First, check deflection with crankshaft in crankcase. If deflection exceeds the specified tolerance, it can be either ball bearing wear, bent or twisted crankshaft at connecting rod journal.

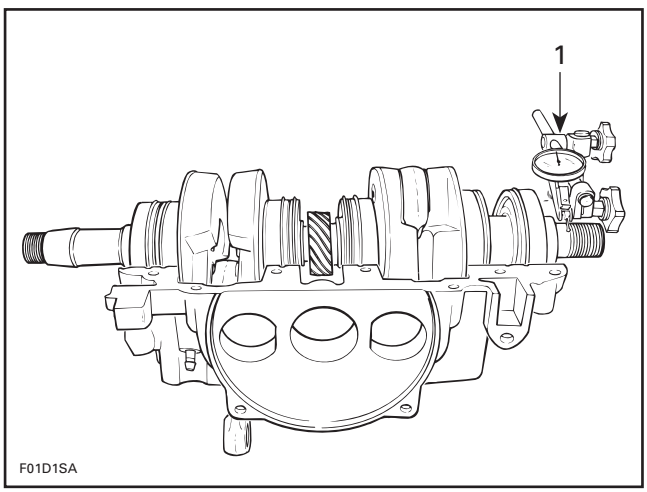

1. *Measuring PTO side deflection in crankcase*

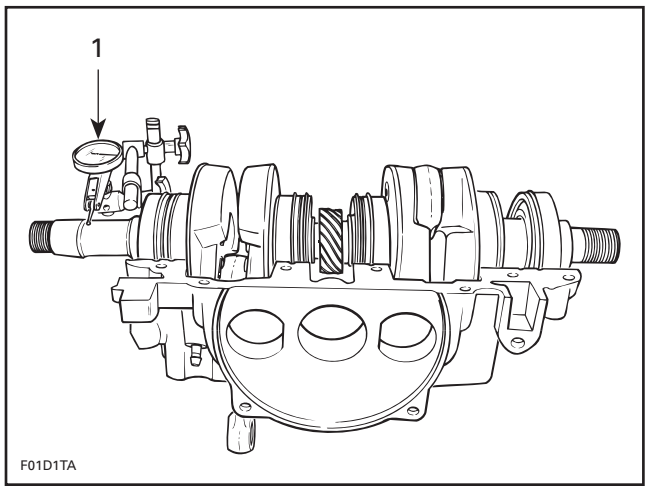

1. Measuring MAG side deflection in crankcase

Remove crankshaft bearings and check deflection again on V-shaped blocks as illustrated.

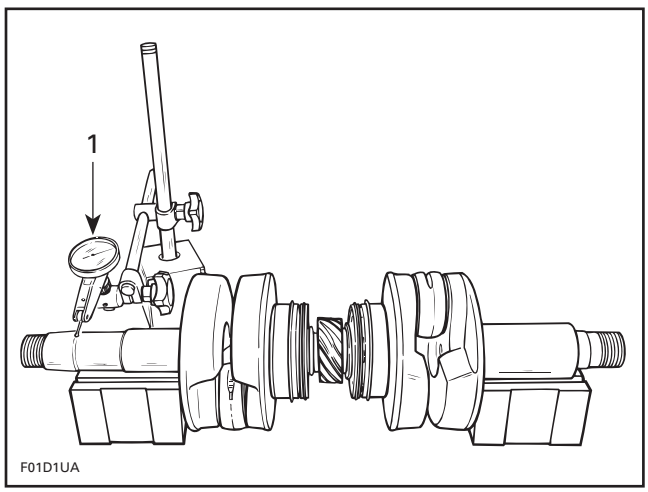

1. Measuring MAG side deflection on V-shaped blocks

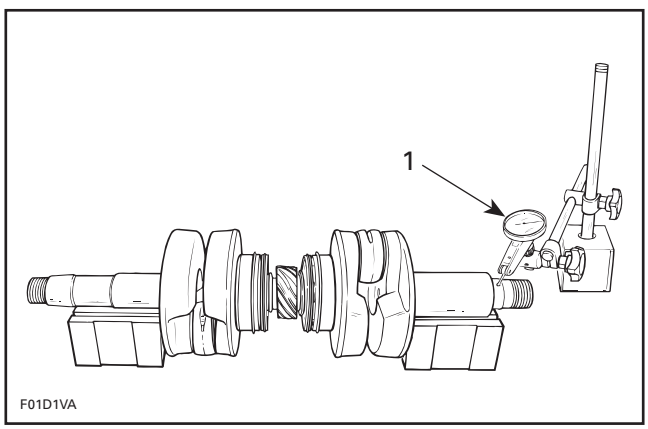

1. Measuring PTO side deflection on V-shaped blocks

NOTE: Crankshaft deflection can not be accurately measured between centers of a lathe.

Connecting Rod Big End Axial Play

Using a feeler gauge, measure distance between thrust washer and crankshaft counterweight.

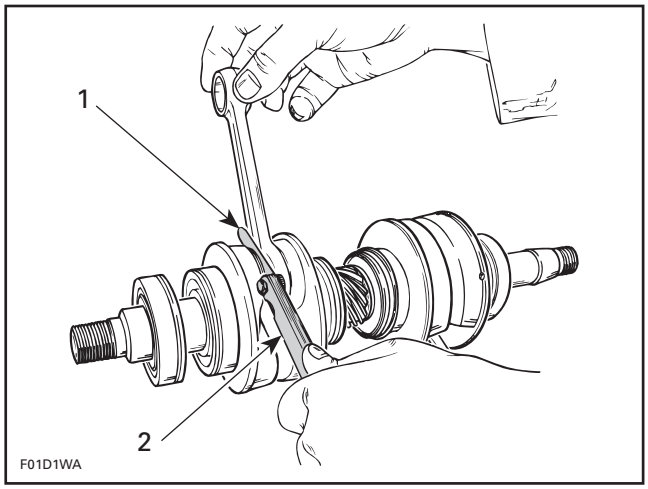

1. Measuring big end axial play
2. Feeler gauge

At Assembly

Pay particular attention to the following:

Bearing

Apply Loctite 767 anti-seize lubricant (P/N 293 550 001) on bearing seats.

Prior to installation, place bearings into a container filled with oil, previously heated to 75°C (167°F). This will expand bearings and ease installation.

Crankshaft with a Labyrinth Sleeve

To properly locate outer PTO bearing, install labyrinth sleeve against inner bearing side.

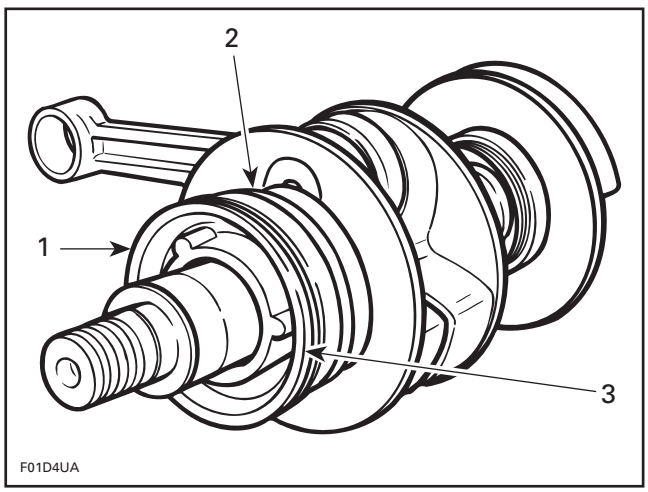

1. Labyrinth sleeve
2. Inner bearing
3. O-ring

NOTE: Be sure to install labyrinth sleeve with its hollow side facing PTO side outer bearing.

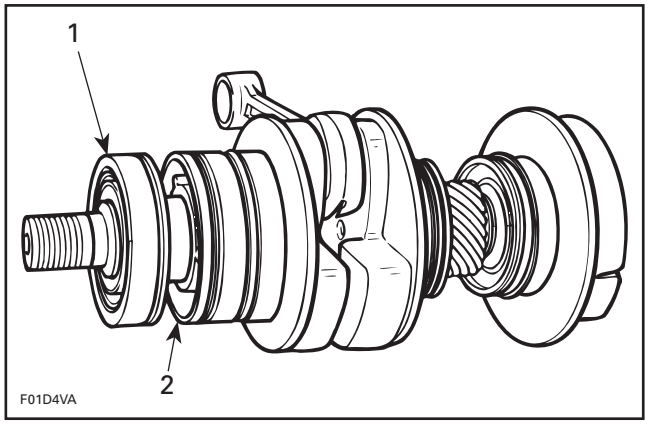

1. PTO side outer bearing
2. Hollow side

Slide on outer bearing until it touches sleeve.

Install bearings so that their peripherical grooves will be located as shown in the following illustration.

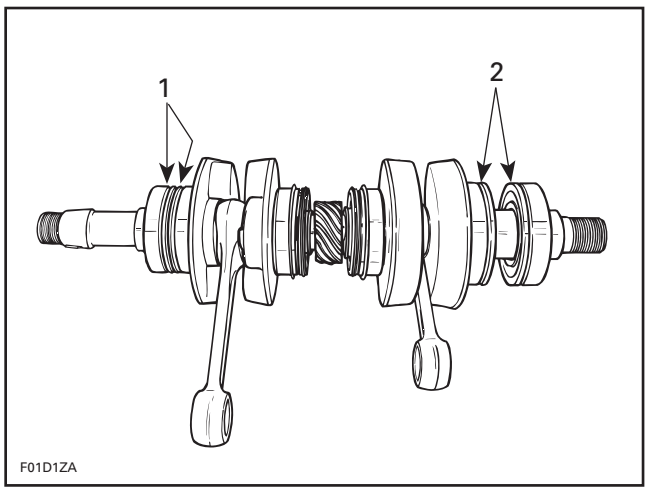

1. Peripherical grooves on inner side (if applicable)
2. Peripherical grooves on inner side

NOTE: Not all engines are equipped with the labyrinth sleeve between the PTO crankshaft bearings. For racing purposes, it would be advantageous for engines with dual carburetors to have the labyrinth sleeve installed (except the 787 and 947 engines) to help displace crankcase volume, thus increasing primary compression.

ENGINE BREAK-IN PROCEDURE

When preparing an engine for racing, many details must be made exactly to specification to achieve the maximum performance.

To obtain the most benefit from your labor and money, a proper break-in is essential.

The proper break-in procedure allows all of the "rough" metallic surfaces to slowly begin to "fit" each other resulting in minimum friction loss and maximum power output.

The importance of this procedure should not be underestimated.

With Bombardier-Rotax watercraft engines, a break-in period is required before operating the engine at full throttle. Engine manufacturer recommendation is about 10 operating hours.

During this period, maximum throttle should not exceed 3/4, however, brief full acceleration and speed variations contribute to a good break-in. Continued wide open throttle accelerations, prolonged cruising speeds and overloading the engine are detrimental during the break-in period.

To assure additional protection during the initial engine break-in, 250 mL of SEA-DOO INJECTION OIL should be added in the fuel tank for the first full fuel tank filling only.

NOTE: Replace spark plugs after engine break-in.

RECOMMENDED OIL

All Sea-Doo watercraft can use BOMBARDIER ROTAX INJECTION OIL (P/N 413 802 900 – 1 L or 413 803 000 – 4 L) which is available from authorized dealers. It is a blend of specially selected base oils and additives which provides outstanding lubrication, engine cleanliness and minimum spark plug fouling.

For the ultimate engine protection, BOMBARDIER ROTAX Formula XP-S (P/N 413 710 500 – 1 L or 413 711 000 – 4 L) can also be used. This fully synthetic oil provide outstanding cleanliness, less friction and wear for greater engine performance and durability.

NOTE: High quality low ash API TC injection oil for 2-cycle engines can be used if BOMBARDIER ROTAX INJECTION OIL is not available.

▼ CAUTION

Never use 4-cycle motor oil and never mix with outboard oil. Do not use NMMA TC-W, TC-W2 or TC-W3 outboard oils or other ashless type 2-cycle oils. Avoid mixing different brands of API TC oil as resulting chemical reaction may cause severe engine damage.

FUNCTION OF AN EXHAUST SYSTEM

Volumetric efficiency (V.E.) of an engine is the ratio of the actual amount of air drawn into an engine versus the capacity of the engine. The natural V.E. of a 2-stroke is about 65%. This means a 250 cc cylinder only draws in about 160 cc of air. The HP output of an engine can be raised by increasing the V.E. of the engine.

The most notable method of raising V.E. is the use of a correctly tuned expansion chamber (or tuned pipe). If the exhaust port is emptied into the open atmosphere, much of the fresh air/fuel charge rushing up the transfer ports is expelled out of the exhaust port and lost. To prevent this charge from being lost, a tuned chamber is attached to the exhaust port. The tuned chamber uses sonic wave motion, which is separate from the exhaust particles and fresh charge particles, to move the particles around (this is like waves in water moving a cork).

When the exhaust port is opened, a sonic or sound wave is generated by the high pressure exhaust gases expanding into the header pipe. The speed of sound at exhaust temperature is about 518 meters (1700 ft) per second.

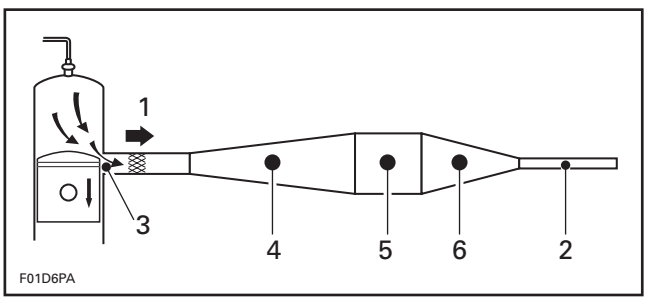

1. *Sonic wave initiated as exhaust port opens*
2. *Tailpipe or stinger*
3. *Head pipe*
4. *Diverging cone*
5. *Mid section*
6. *Converging cone*

This wave travels down the header pipe and expands into the diverging cone causing a negative pressure of about 48 kPa (7 PSI).

This negative pressure helps pull the remaining exhaust particles out of the cylinder. It also helps pull the fresh charge up the transfer ports and into the cylinder.

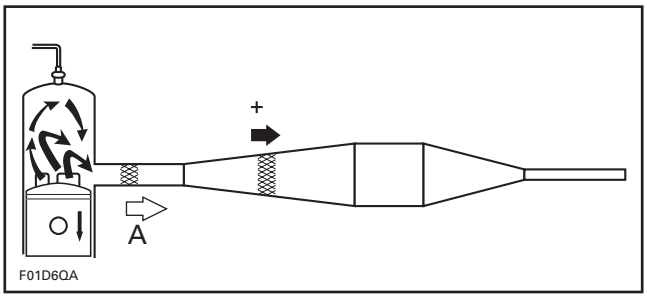

A. 48 KPa (7 PSI)

As the sonic wave hits the converging end of the pipe, a positive pressure wave is reflected back towards the exhaust port. If the length of the pipe is tuned correctly, this positive pressure returns to the header pipe just before the exhaust port closes and pushes the fresh charge that has escaped into the header pipe into the cylinder.

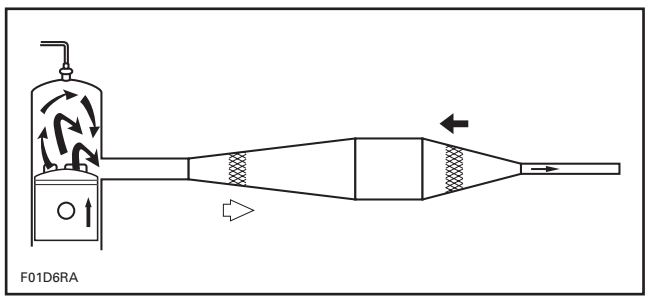

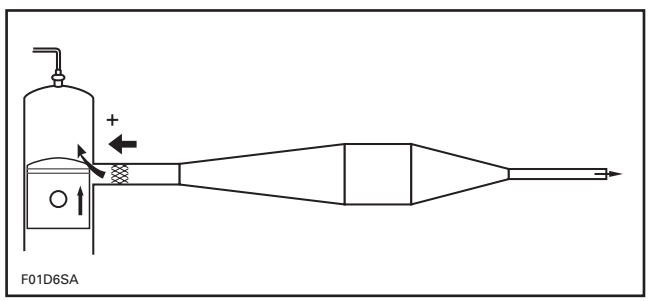

The pipe then bleeds down to approximately atmospheric pressure and the cycle is repeated. The design of the pipe depends upon many factors, including bore, stroke, and desired effective operating RPM.

Because the sonic wave speed is fairly constant, the length of the pipe is a large factor in controlling the engine RPM at which the pipe will be efficient. A shorter pipe will result in higher RPM's but not necessarily more horsepower (the pipe must be compatible with the other flow characteristics of the engine, carburetor size, intake timing, etc.).

Maximum efficiency is generally obtained by having 1 pipe for each cylinder. But, this maximum point may be across a narrow and/or high RPM range, causing difficulties in driveability.

The 2 into 1 tuned pipes used on Sea-Doo watercraft are very accurately tuned for the overall design of these particular engines.

NOTE: Changing the tuned pipe for an aftermarket unit will usually change RPM and torque of the engine. An impeller change to compliment your new tuned pipe will probably be necessary.

Water Injected Exhaust System

Several factors necessitate the use of a water cooled, water injected, tuned exhaust system. One major concern is overall bilge temperature, which is kept low by keeping the part of the tuned pipe closest to the engine jacketed with water and the remainder of the exhaust system cool by injecting water directly into the exhaust stream. Injecting water into the exhaust system not only helps keep the exhaust system cool, but also changes the characteristics of the sonic wave in the tuned pipe. The water injected exhaust system reduces exhaust gas temperature, therefore increasing exhaust gas density in the tuned pipe. The sonic wave moves slower in this cooled, denser air so it takes longer to reflect back to the exhaust port. The net effect is that the tuned pipe can be shorter yet achieving the same results as a longer "dry" tuned pipe.

By changing the amount of water injected into the exhaust stream, the characteristics of the engine power band can be altered. It is important that enough water is injected into the exhaust stream to keep the rubber hoses and muffler from damage due to excessive heat.

In Limited Class and Superstock Class racing an aftermarket exhaust pipe and manifold are allowed. The muffler however must remain stock with no modifications. When purchasing an aftermarket pipe consult the manufacturer of the pipe to determine if the pipe is race legal by your race sanctioning body (IJSBA). Some pipes will fit your craft, but may not be race legal because of inadequate head pipe cooling or mounting of the pipe requires relocation of the muffler. Muffler relocation is illegal by several sanctioning bodies for Limited Class and Superstock Class racing.

WATER FLOW REGULATOR VALVE

All watercraft equipped with a 787 or 947 engines use a water flow regulator valve located on top of the muffler to control the amount of water injected into the exhaust system at the tuned pipe head and the muffler. The purpose of this is two fold:

1. It effectively controls the exhaust wave speed thereby creating a more useful or broader power curve.
2. It cools the exhaust system and hoses which prevents heat damage.

NOTE: The water injected in the muffler is not regulated by the valve; it is controlled by a fitting located at the bottom of the valve, which secure also the valve to the muffler.

The water regulator is calibrated for use on watercraft which have no engine modifications. The regulators works quite well on the stock watercraft and provides a noticeable increase in performance over models not so equipped. If the watercraft is not being raced but modifications are made to the engine such as increased compression, changes in port timing, etc. the water regulator valve will not deliver the correct amount of water for optimum performance. Recalibrating the regulator water flow will require most users to experiment with different size holes being drilled into the regulator then threading and fitting the holes with jets. Various size jets will then be tried until the best performance is found.

The water regulator valve is legal for competition use in the IJSBA. Any valves used within the entire engine cooling system must be of the fixed type or fully automatic type, no manually operated valves are permitted. In some situations it may be desirable to "hard" jet the exhaust system.

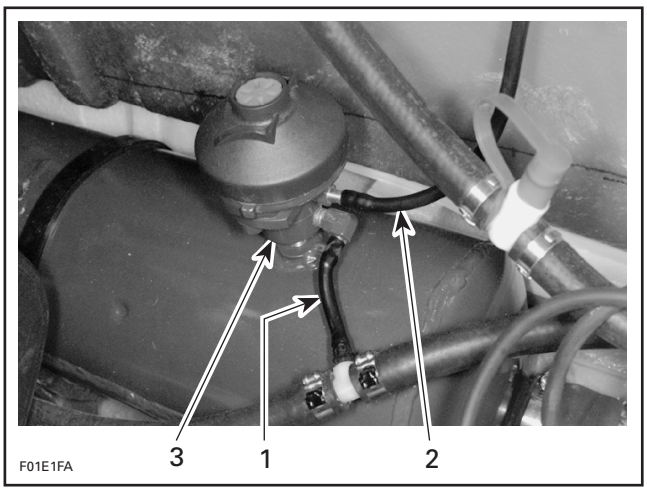

1. Water supply hose of regulator valve
2. Regulated water to injection fitting at tuned pipe head
3. Water injected into the muffler

Procedure for Hard Jetting the Exhaust System

▼ CAUTION

When "Hard Jetting" an exhaust system small jets are used to regulate water flow. These jets are very prone to clogging by sand or debris. The jets must be continually checked for blockage or system damage will occur. A cooling water filter is recommended.

1. Remove the water flow regulator valve and replace the unit with a fitting that will thread into the muffler in its place. The fitting must have at least a 3 millimeter orifice through it and be threaded to accept a Mikuni main jet. The fitting must also accept a 1/4 in inside diameter hose.
2. At the exhaust tuned head pipe there is a 1/4 in fitting already in use that was used to accept the regulated water supply from the now discarded water flow regulator valve. Remove the hose from the fitting at the head pipe and thread the fitting to accept a Mikuni main jet.
3. The engine is equipped with a 1/2 in water inlet hose coming from the jet jump. Between the jet pump and the engine there is a 1/4 in outside diameter T-fitting and hose currently installed. The fitting and hose was used to supply water to the now discarded water regulator. Attach a 1/4 in T-fitting to the hose in place of the water flow regulator valve. Attach 2 hoses of 1/4 in hoses to the T-fitting, run 1 hose to the new fitting on the muffler which replaces the water flow regulator valve and 1 hose to the fitting on the tuned head pipe.
4. Start the hard jetting procedure by installing a no. 200 Mikuni main jet in the fitting on the muffler and a no. 150 Mikuni main jet in the fitting on the exhaust tuned head pipe. After an initial test ride of no more than 3 minutes, stop and check the exhaust hoses for excessive temperature. If you believe the temperatures to be too high install a larger jet in both areas. This is highly unlikely because the initial jet sizes stated should be more than sufficient.
5. After verifying that the exhaust hose temperature is not excessive you can start testing the watercraft with smaller or larger jets in order to attain the performance desired.

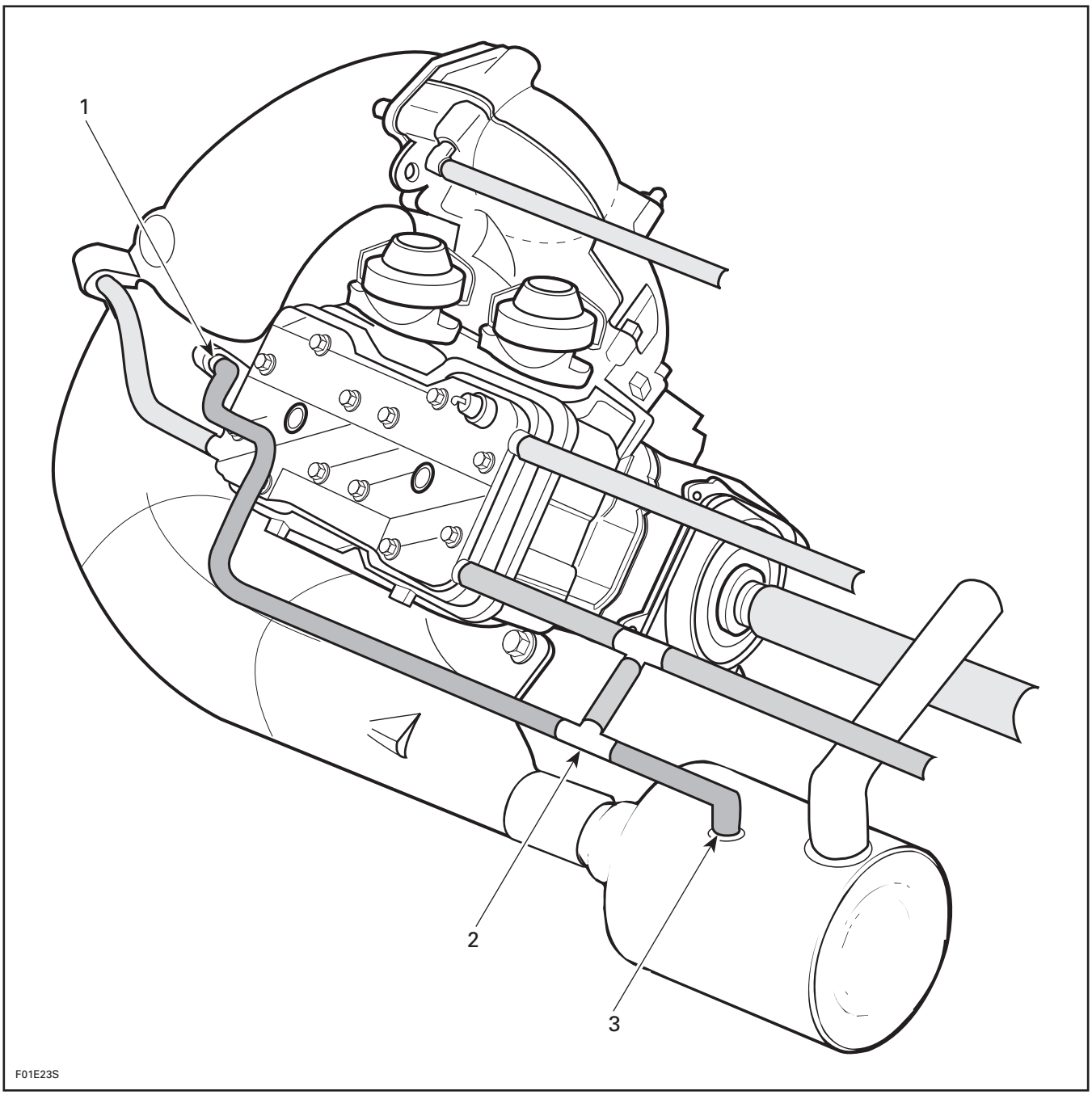

1. *Original fitting threaded to accept a Mikuni main jet size 150*
2. *New 1/4 in T-fitting*
3. *New fitting threaded to accept a Mikuni jet size 200*

IMPORTANT: It is necessary to readjust the exhaust hard jetting for maximum performance when racing in different water temperatures. Because of this it is recommended that you keep a record of the jet sizes chosen at given water temperatures.

FUNCTION OF THE COOLING SYSTEM

All Sea-Doo watercraft are equipped with a total loss cooling system. The water supply is taken from a pressurized area in the jet pump between the impeller and venturi. The water passes through a tee, where a small amount is diverted into the exhaust stream (refer to WATER INJECTED EXHAUST SYSTEM in this section), and the majority continues into the exhaust system cooling jacket to be warmed before entering the engine. On the 1988-91 engines, water enters at the bottom of the exhaust manifold and tuned pipe cooling jackets; then to the engine. On the 1992-97 engines (excluding the 717 and 787 engines), the water enters the cooling jacket on the tuned pipe, and travels into the cooling jacket around the exhaust manifold, after which it enters the cooling jackets of the cylinders through small passages under the exhaust ports.

The flow of water through the exhaust system has changed slightly from the 1988-91 yellow engines to the 1992-97 white engines; however, the most important point is that on either type of engine, the water is still pre-heated by the exhaust system before entering the engine cooling jackets.

On the 717 and 787 engines the water first enters the cylinder head, unlike previous models. The cylinder head cooling jacket has been divided into 2 sections. One side of the head's water jacket (exhaust side) has cool incoming water circulate around the combustion chambers, then into the tuned pipe and exhaust manifold cooling jacket. The preheated water then enters the cooling jackets of the cylinders. From the cylinders the water flows upward through calculated holes to the outlet side of the cylinder head. The outlet side of the cylinder head's cooling jacket also houses the engine temperature sensor, where the now hot water escapes through the engine water outlet hose.

Some aftermarket companies may suggest that the cooling system be re-routed to feed cold water directly to the engine instead of allowing the exhaust system to warm it first. This change should be approached with caution as random changes without adequate testing and development could be detrimental to the engine. Changing the routing of the cooling system could result in less power output and engine reliability.

On the 1988-91 engines, the cooling water proceeds into the engine via a water distributor into the crankcase, then up to the cylinders. On the 1992-97 engines, the cooling water proceeds from the exhaust manifold cooling jacket into the cylinder cooling jacket via the passages below the exhaust ports. On all engines, the water surrounds the cylinders and moves upward through calculated holes in the cylinder head exiting the engine at the intake side of the cylinder head.

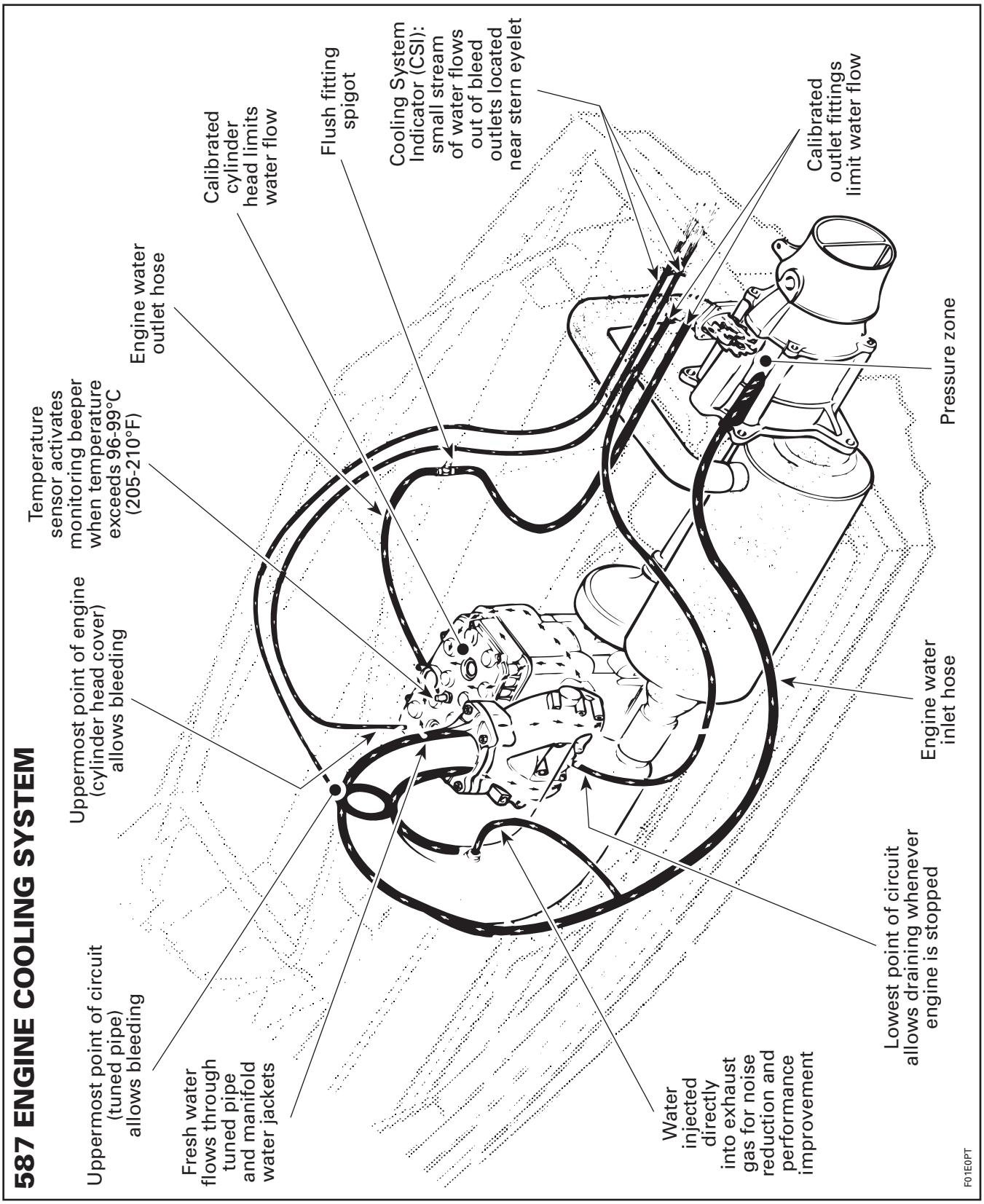
587 ENGINE COOLING SYSTEM
Uppermost point of circuit (tuned pipe) allows bleeding
Fresh water flows through tuned pipe and manifold water jackets
Uppermost point of engine (cylinder head cover) allows bleeding
Temperature sensor activates monitoring beeper when temperature exceeds 96-99°C (205-210°F)
Engine water outlet hose
Calibrated cylinder head limits water flow
Flush fitting spigot
Cooling System Indicator (CSI): small stream of water flows out of bleed outlets located near stern eyelet
Water injected directly into exhaust gas for noise reduction and performance improvement
Lowest point of circuit allows draining whenever engine is stopped
Engine water inlet hose
Pressure zone
Calibrated outlet fittings limit water flow
F01E0PT

657X AND 657 ENGINE COOLING SYSTEM

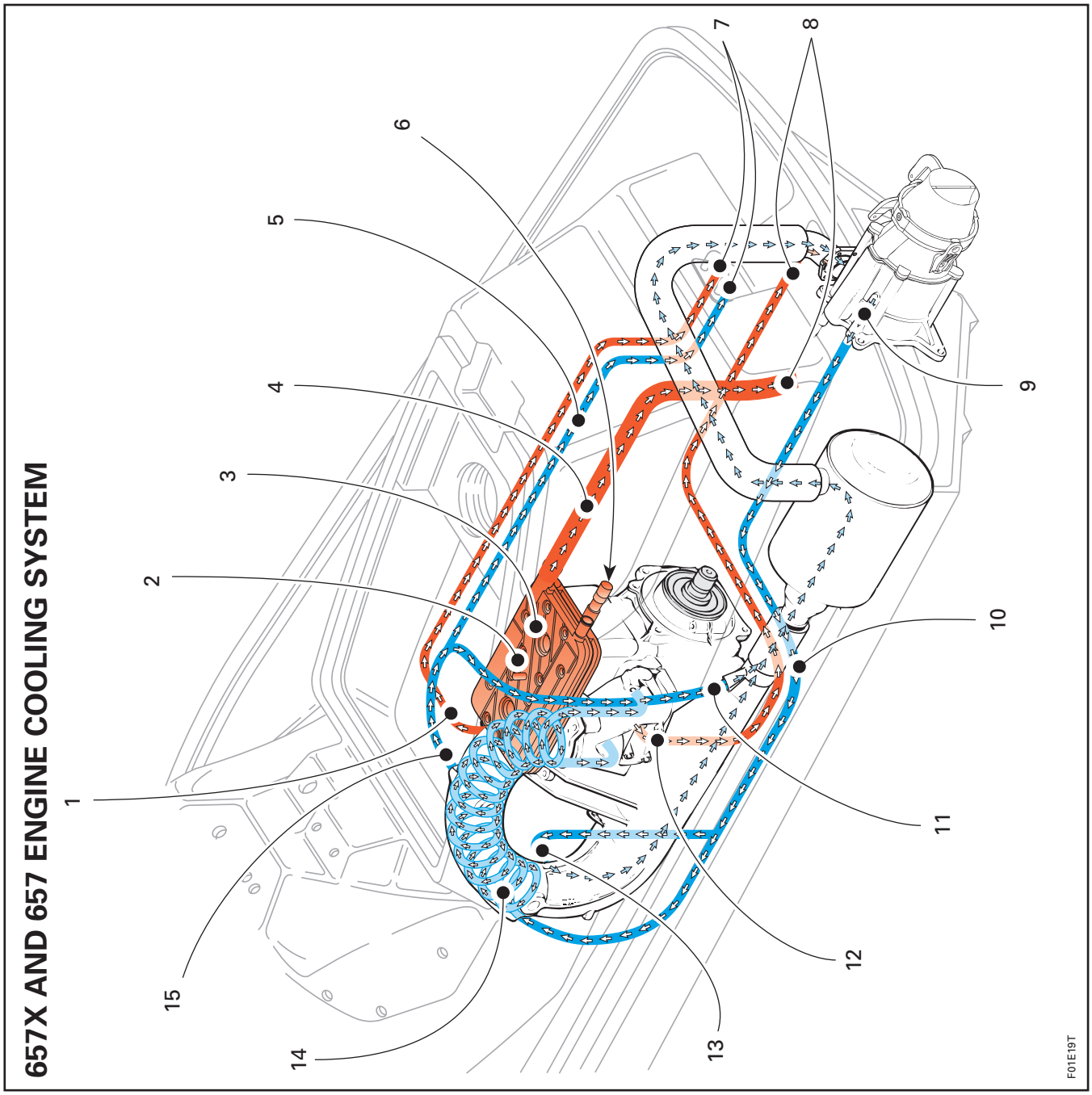

1. *Uppermost point of engine (cylinder head) allows bleeding*
2. *Temperature sensor activates monitoring beeper when temperature exceeds 96-99°C (205-210°F)*
3. *Calibrated cylinder head limits water flow*
4. *Engine water outlet hose*
5. *SPX model*
6. *Fitting spigot*
7. *Cooling System Indicator(s) (CSI): Small stream of water flows out of bleed outlet(s) located near stern eyelet*
8. *Calibrated outlet fittings limit water flow*
9. *Pressure zone*
10. *Engine water inlet hose*
11. *Tuned pipe bleed hose injects water into muffler to cool exhaust components (GTX model)*
12. *Lowest point of circuit allows draining whenever engine is stopped*
13. *Water injected directly into exhaust gas for noise reduction and performance improvement*
14. *Fresh water flows through tuned pipe and manifold water jackets*
15. *Uppermost point of circuit (tuned pipe) allows bleeding*

717 ENGINE COOLING SYSTEM

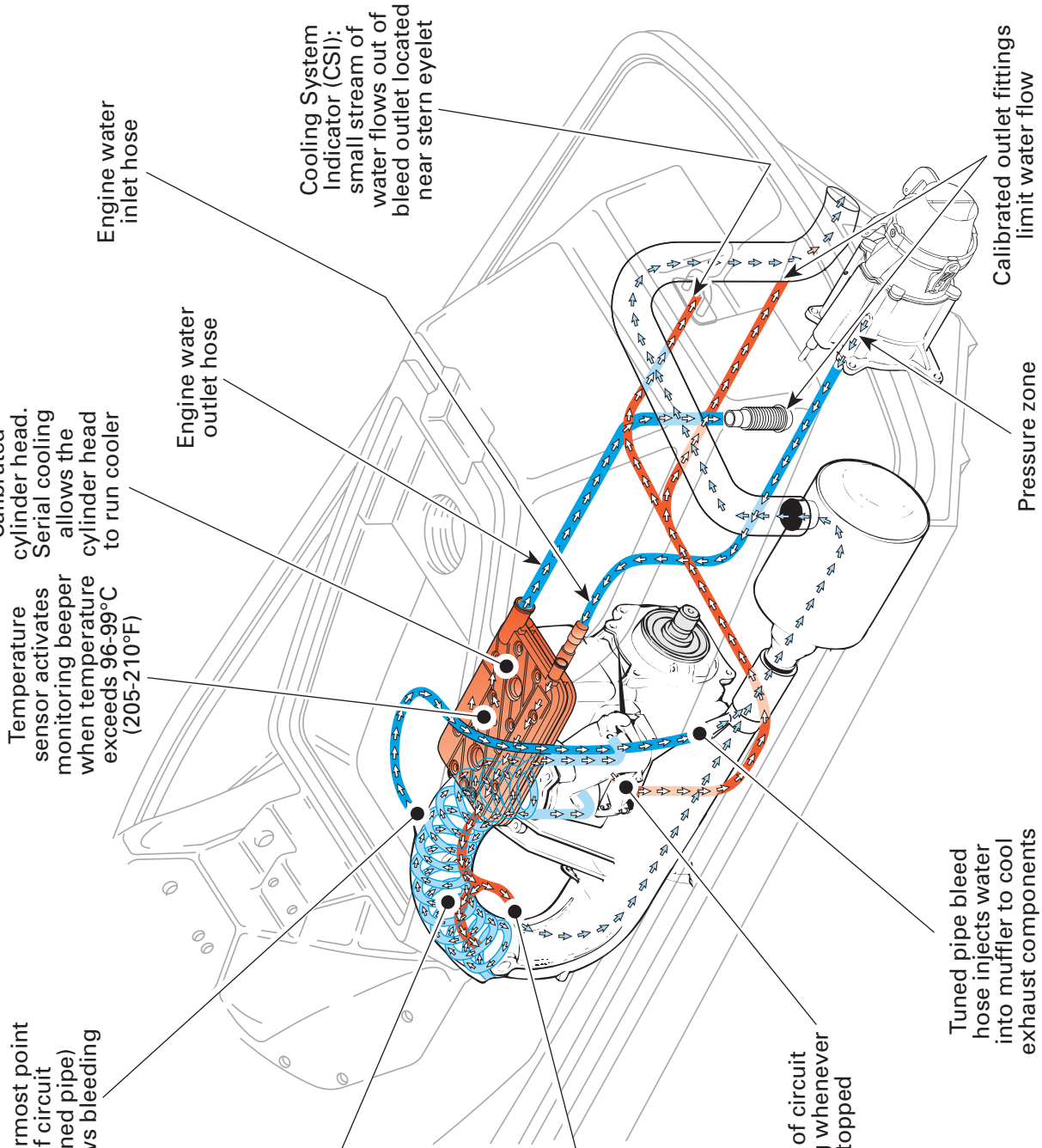

787 ENGINE COOLING SYSTEM

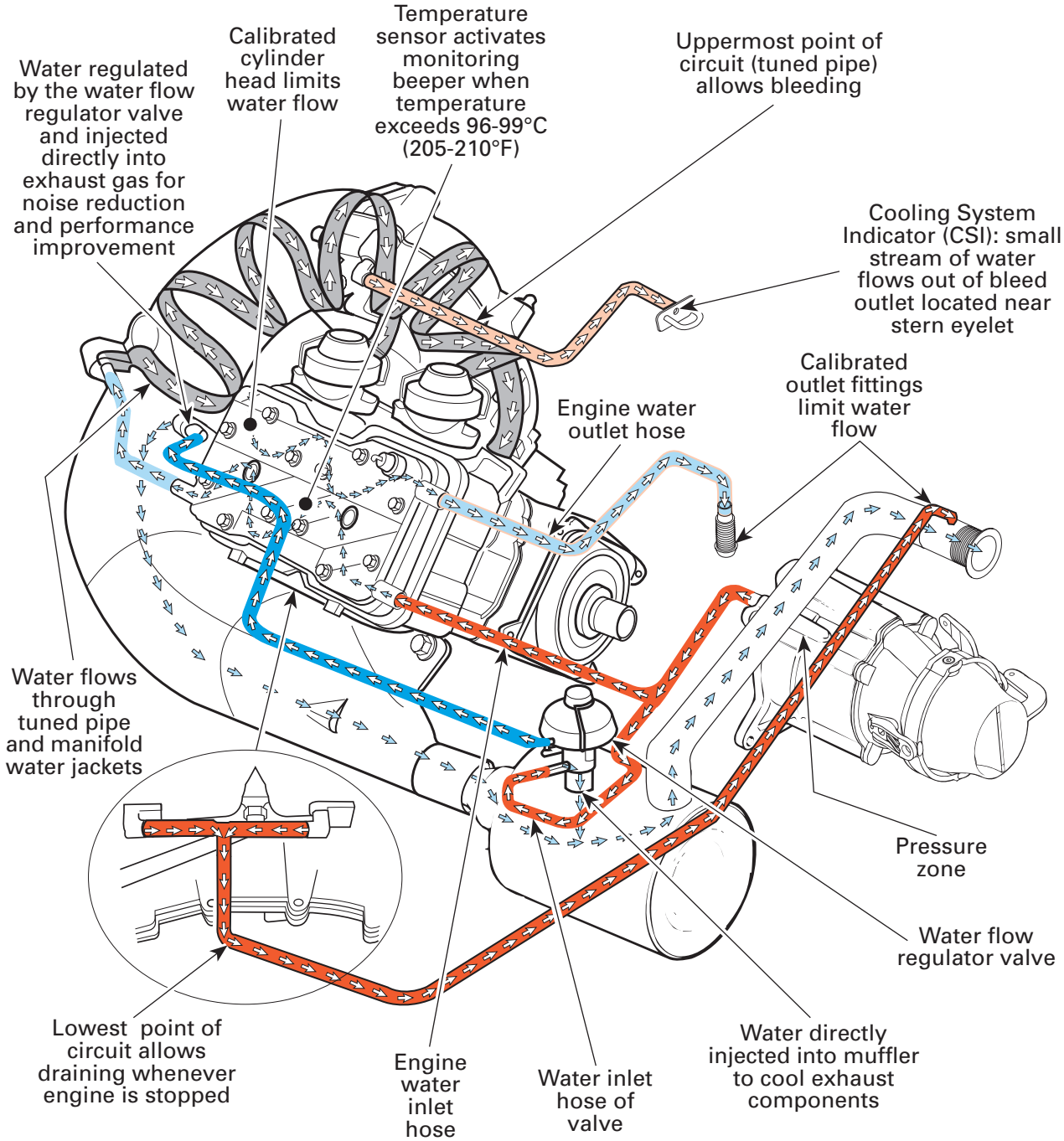

IGNITION SYSTEMS

Two stroke engines in watercraft rely on an electric spark to initiate combustion of the air/fuel charge which has been inducted into the combustion chamber. For the engine to operate efficiently, the spark must be delivered at precisely the right moment in relation to the position of the piston in the cylinder and the rotation at speed of the crankshaft. Additionally, the spark must be of sufficient intensity to ignite the air/fuel mixture, even at high compression pressure and high RPM.

It is the function of the ignition system to generate this voltage and provide it to the spark plug at the correct time.

CDI System

The Nippondenso Capacitor Discharge Ignition (CDI) system has 4 magnets located on the crankshaft flywheel. AC voltage is induced in the generating coils as the poles of the magnets rotate past the poles of the coils. Timing is controlled by the position of the coil poles relative to the magnet poles, which are directly related to piston position. The CDI module contains the electronic circuitry to store and control the initial voltage and deliver it to the ignition coil (and then the spark plug) at the correct moment. The ignition coil is a transformer that steps up the relatively low voltage (150-300 V) of the generating coil to the 20,000 – 40,000 volts necessary to jump the spark plug gap and initiate the burning of the air/fuel mixture in the combustion chamber.

NOTE: On several models, the CDI module is integrated in the ignition coil.

DC-CDI System

The Nippondenso Direct Current-Capacitor Discharge Ignition system offers a more powerful and stable ignition at low RPM's.

The magneto is responsible for charging the battery, which is the primary source for this system.

A trigger coil is mounted outside the rotor (inside the magneto housing of the engine) and is not adjustable. Its purpose is to signal the engine position to the MPEM. The rotor has 2 protusions (180° apart) that, when coupled with the trigger coil, accomplish the signaling.

The ignition coil steps up the voltage input from the MPEM to high voltage current for the spark plugs.

All Systems

Maximum power from a given engine configuration is produced when peak combustion chamber pressure (about 750 PSI) takes place at about 15° after crankshaft rotation ATDC. Normal combustion is the controlled burning of the air/fuel mixture in the cylinder. The flame is initiated at the spark plug and spreads to the unburned at the edges of the cylinder.

The flame front travels through the cylinder at about 30 m (100 ft) per second. In order to achieve maximum pressure at about 15° ATDC, the spark must occur about 15° BTDC.

Complete combustion will finish at about 35° ATDC. The actual amount of spark advance BTDC is dependent upon bore size, combustion chamber shape, operating RPM, mixture turbulence and the actual flame speed.

Flame speed is directly proportional to piston speed in an almost linear fashion. Though it is not completely understood why this relationship exists, it is thought to be related to intake speed and mixture turbulence. Hence, flame speed increases as RPM increases. It also increases as the air/fuel ratio becomes leaner.

Because the flame speed is slower at lower RPM's, more advance at low RPM is necessary for maximum performance. Advancing the spark too much BTDC for the needs of the engine will cause the engine to detonate.

Ignition advance on Rotax engines is measured by a linear distance of piston travel BTDC. A dimension taken through a straight spark plug hole in the center of the head is a direct measurement. A direct measurement can be converted to degrees of crankshaft rotation by the appropriate formulas. Initial ignition timing procedures can be found in the appropriate model year *Shop Manual*.

When working with modified engines it may be necessary to alter ignition timing from stock specifications to achieve maximum power output or to prevent engine damage.

Select a fuel that meets the octane requirement for the compression ratio of your engine (REFER TO OCTANE REQUIREMENTS FOR ROTAX ENGINES). Once you have chosen the fuel, you will be tuning the engine (IGNITION TIMING) for maximum efficiency for that fuel. If you change to another brand of fuel or a different octane it will be necessary to re-tune the engine. Failure to do so may cause engine damage or power loss.

NOTE: For initial tuning it is recommended that you test using 1 heat range colder spark plug than stock. If upon completion of tuning the center insulator shows excessive carbon deposits go back to the stock heat range spark plug.

If you have increased the engine compression, the fuel mixture will normally burn at a faster rate. Because of this effect combustion chamber pressure may peak sooner than desired. If this occurs, the engine will overheat leading to detonation and extreme engine damage. Because of these possibilities it is recommended that you pay particular attention to your spark plug readings during your initial tuning. If there are any signs of overheating or if detonation is heard it is advisable to:

1. Determine that the carburetion is not adjusted too lean.
2. Try a higher octane fuel.
3. Retard ignition timing to remedy the problem.
4. Determine that the exhaust system is providing for adequate flow.

Ignition Timing Specifications

Refer to appropriate model year *Shop Manual*.

Ignition Timing Procedure

587, 657, 657X, 717D and 717 Engines

It is very important that timing specification is checked at 6000 RPM with a cold engine. When preparing an engine for racing, the flywheel should be checked for the correct phasing between the firing points of the MAG and PTO spark plugs. The firing points should be exactly 180° apart; if there is any deviation between the firing points, the flywheel should be changed for a perfect unit to obtain maximum performance.

In order to check the flywheel for proper phasing, the crankshaft itself must first be checked for the 180° phasing (refer to crankshaft cautions and inspection). Use the procedure for verifying PTO flywheel timing mark position, and repeat the procedure that was done to the MAG side cylinder on the PTO cylinder. There should be 2 marks on the PTO flywheel 180° apart. The ignition fires every 180° of crankshaft rotation (at TDC and BDC) so the marks should line up exactly when viewed with a timing light. If they do not line up exactly and the crankshaft is correctly phased, the flywheel magnets may not be phased exactly 180° apart.

Before checking ignition timing with a stroboscopic timing light (dynamic test), it is mandatory to scribe a timing mark on the PTO flywheel (static test) corresponding to the specific engine.

Also, the timing mark scribed on the PTO flywheel can be used to troubleshoot a broken magneto woodruff key.

NOTE: Do not use the factory mark found on the PTO flywheel to check ignition timing or troubleshoot any problems.

▼ CAUTION

The relation between the PTO flywheel mark position and crankshaft position may change as the PTO flywheel is screwed on the crankshaft. As an example, when the PTO flywheel is reinstalled on the crankshaft, it can slightly turn on the crankshaft when the engine is accelerated, even if it is properly torqued. This is enough to obtain a false ignition timing reading. Always verify PTO flywheel mark position before checking ignition timing with an appropriate timing light.

787, 787X and 947 Engines

Normally ignition timing adjustment should not be required. After it is set, it should remain correctly adjusted since all the parts are fixed and not adjustable. The only time the ignition timing might have to be changed would be when replacing the crankshaft, the magneto rotor, the trigger coil and the MPEM. If the ignition timing is found incorrect, you should first check for proper crankshaft alignment. This might be the indication of a twisted crankshaft.

With this DC-CDI system, the ignition timing can be checked with either the engine hot or cold. Also, the ignition timing is to be checked at 3500 RPM with the timing light.

Between 3000 and 4000 RPM, the spark advance does not change. So when checking ignition timing at 3500 RPM, a change in engine speed within ± 500 RPM will not affect the timing mark when checked with the timing light.

Static Test

All Engines

1. Disconnect MAG side spark plug wire and connect wire to grounding device then remove spark plug.
2. Remove PTO flywheel guard.

587, 657, 657X, 717D and 717 Engines

3. Install timing mark pointer tool on engine using wing nuts previously removed.

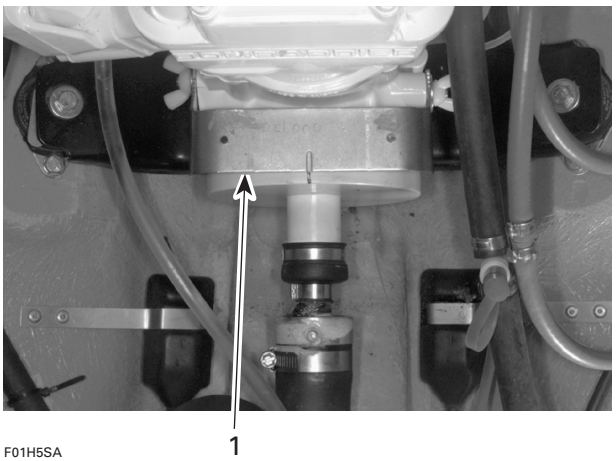

1. Timing mark pointer tool (P/N 295 000 130)

787, 787X and 947 Engines

3. Remove middle screw securing the engine to the rear engine mount. Reinstall screw with timing mark pointer tool.

1. Timing mark pointer tool (P/N 295 000 135)

All Engines

4. Install and adjust a TDC gauge in MAG side spark plug hole.

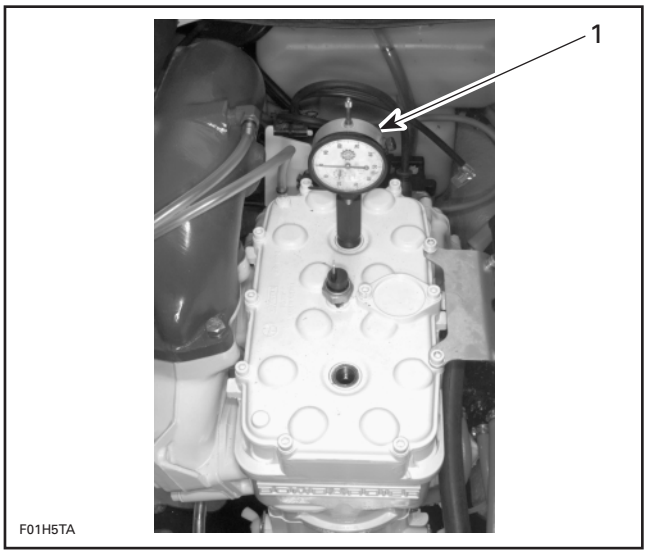

TYPICAL

1. TDC gauge (P/N 295 000 143) on MAG side

5. Rotate PTO flywheel counterclockwise (when facing it) until piston is at Top Dead Center.

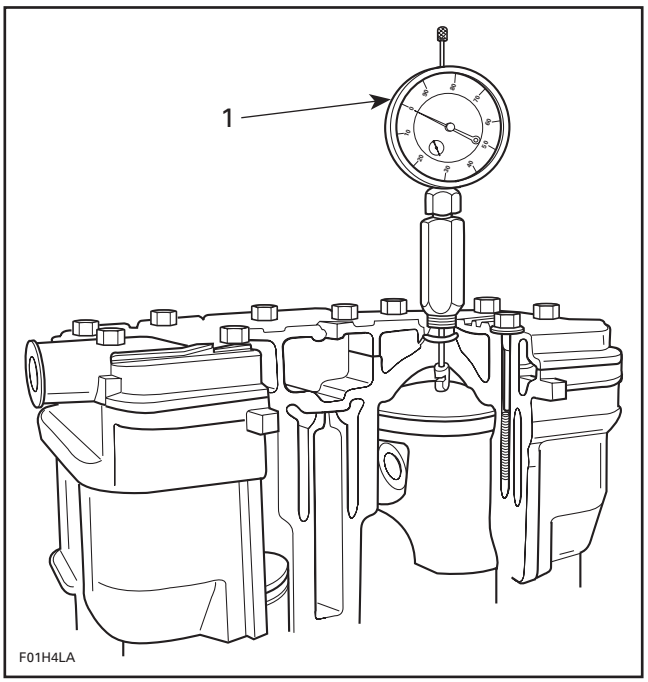

TYPICAL

1. Adjust gauge dial at zero

6. From this point, rotate flywheel clockwise to reach proper specification according to the engine. Refer to the appropriate model year *Shop Manual*.

7. Scribe a thin mark on PTO flywheel in the middle of tool slot (587, 657, 657X, 717D and 717 engines) or aligned with timing mark pointer tool (787, 787X and 947 engines).

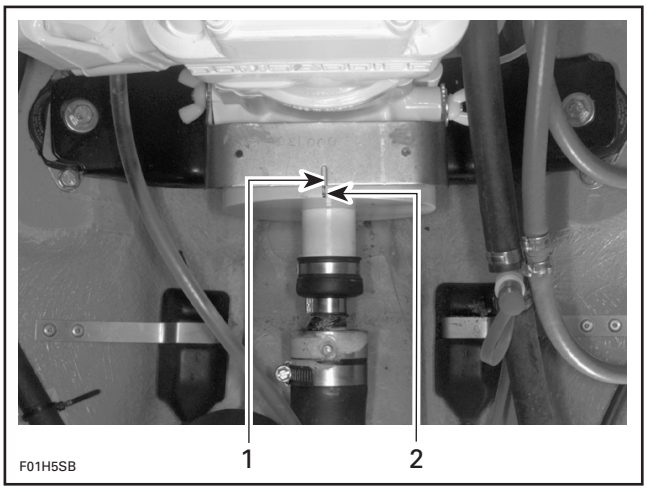

TYPICAL

1. *Tool slot*
2. *Flywheel mark*

NOTE: This mark becomes the reference when using the stroboscopic timing light.

CAUTION

The static test cannot be used as a timing procedure, therefore, always check the timing with a stroboscopic timing light.

8. Remove TDC gauge.
9. Reinstall spark plug and connect wire.

Dynamic Test

To check ignition timing, use Bombardier timing light (P/N 529 031 900).

587, 657, 657X, 717D and 717 Engines

NOTE: To perform this procedure, make sure to use a stroboscopic timing light rated up to 6000 RPM. Otherwise, an inaccurate reading will be obtained.

The ignition components are affected by temperature variation, therefore, timing must be checked when engine is cold, after idling for a MAXIMUM of 20 seconds.

1. Connect an induction-type tachometer (P/N 295 000 100) to spark plug wire.

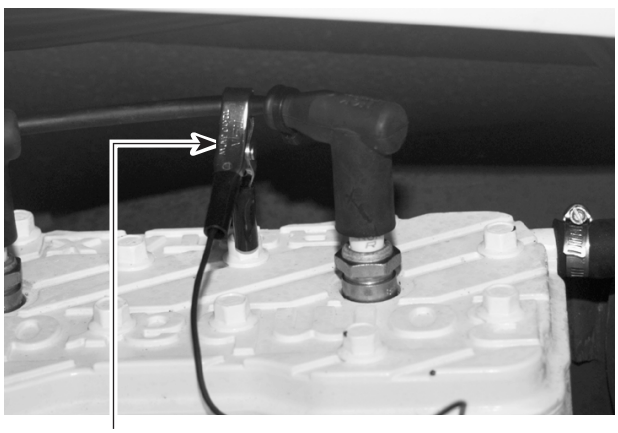

1. *Tachometer pick-up*

2. Connect timing light pick-up to MAG side spark plug wire.

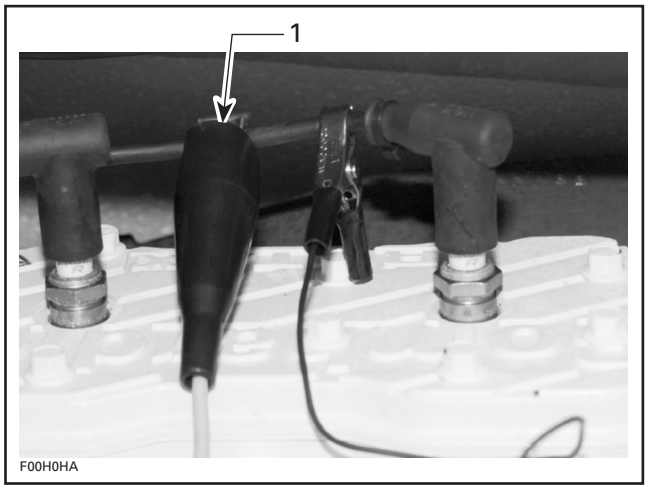

1. Timing light pick-up

3. Start engine and point timing light straight in line with timing tool slot. Bring engine to the specified RPM.

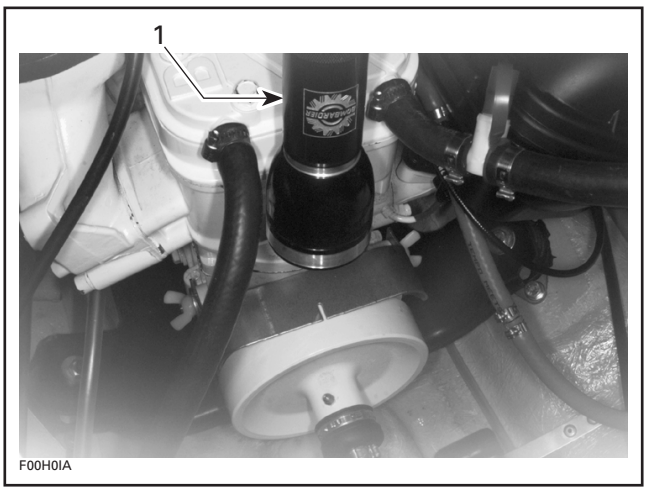

1. Timing light straight in line with tool slot

▼ CAUTION

If engine is to be run more than a few seconds, engine must be cooled using the flush kit.

4. Check if PTO flywheel mark aligns with timing tool slot.

NOTE: On this system, timing advance decreases as engine speed increases.

If timing mark aligns with tool slot, timing is properly set. If not, refer to Ignition Timing Adjustment.

787, 787X and 947 Engines

1. Connect an induction-type tachometer (P/N 295 000 100) to spark plug wire.

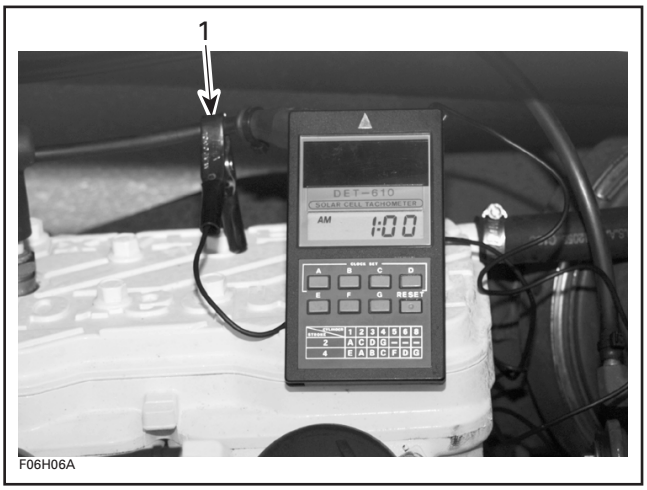

1. Tachometer pick-up

2. Connect timing light pick-up to MAG side spark plug wire.

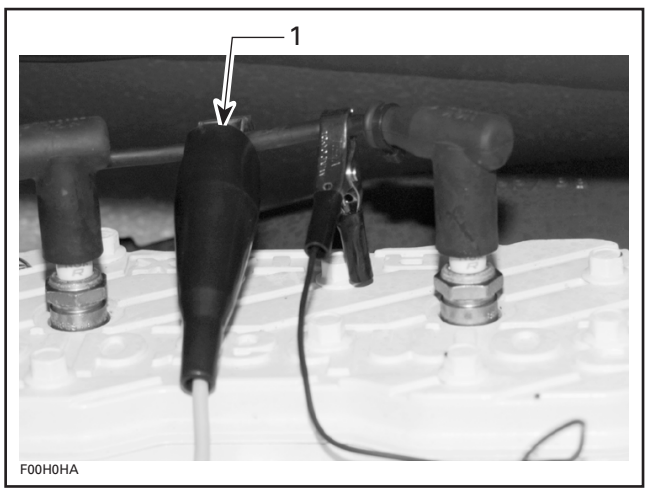

1. Timing light pick-up

3. Rev the engine to 3500 RPM and point beam of timing light straight in line with timing mark pointer.

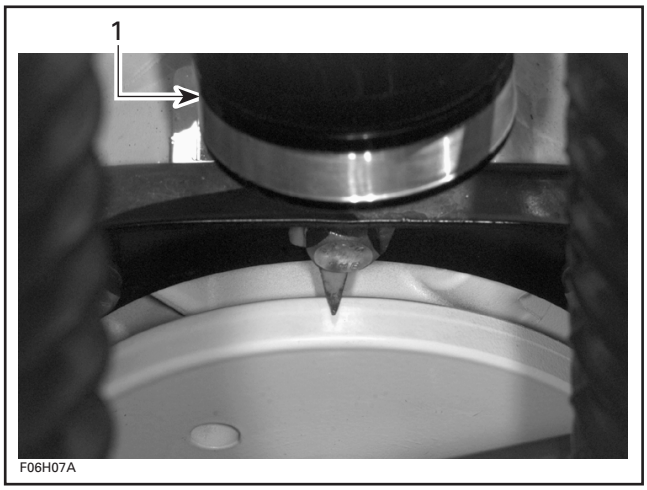

1. Timing light straight in line with tool slot

CAUTION

If engine is to be run more than a few seconds, engine must be cooled using the flush kit.

NOTE: If mark on PTO flywheel is perfectly aligned with timing mark pointer, no adjustment is required. If it is not the case, refer to Ignition Timing Adjustment.

Ignition Timing Adjustment

587, 657, 657X, 717D and 717 Engines

Remove battery (if applicable).

Remove magneto housing cover and wire support.

Remove magneto flywheel.

Timing is performed by moving armature plate; clockwise to retard spark occurrence or counter-clockwise to advance.

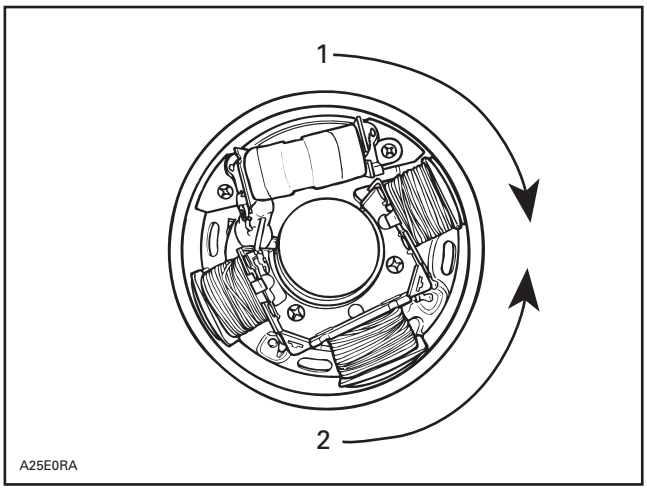

TYPICAL

1. To retard
2. To advance

To adjust, loosen 3 armature plate retaining screws and slightly rotate armature plate in proper direction.

NOTE: As a guideline, turn the armature plate the same amount needed to align mark on PTO flywheel.

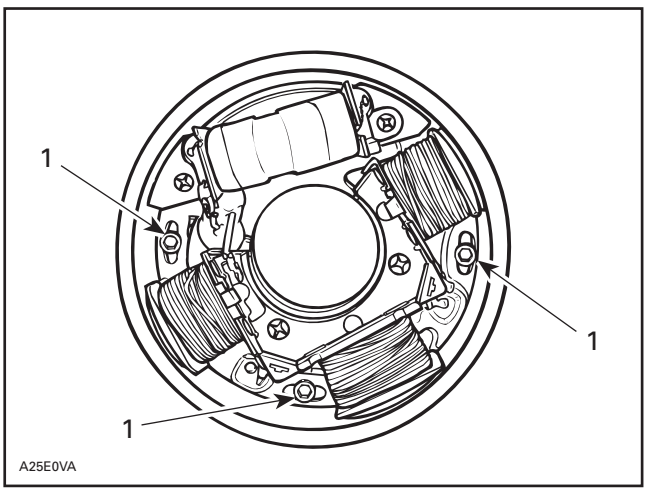

TYPICAL

1. Retaining screw

Example 1

When PTO flywheel mark is on right side of timing tool slot, it indicates advanced timing.

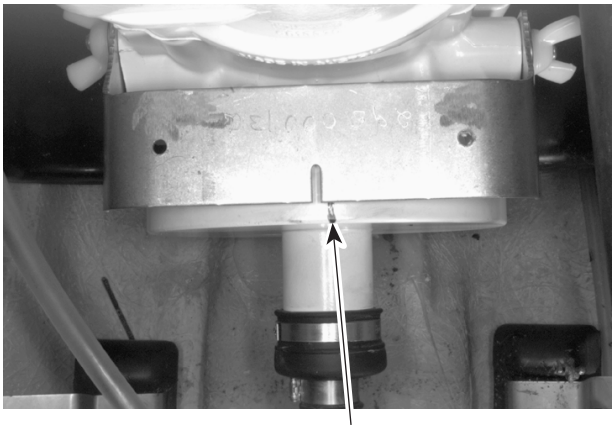

1. *Too advanced timing*

In this case, turn armature plate clockwise when facing it.

Example 2

When PTO flywheel mark is on left side of timing tool slot, it indicates retarded timing.

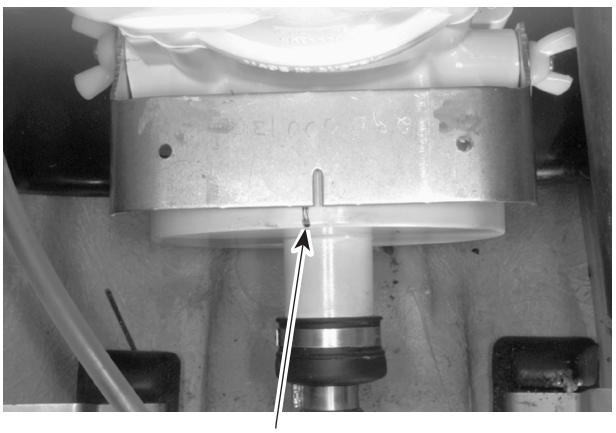

1. *Retarded timing*

In this case, turn armature plate counterclockwise when facing it.

After adjustment, tighten armature plate retaining screws.

▼ CAUTION

Armature plate screws must have Loctite 242 (blue) applied before tightening. Make sure armature plate screws are well secured.

Reinstall removed parts.

Recheck ignition timing (make sure engine is cold).

Repeat armature plate positioning procedure if timing mark position is not adequate.

787, 787X and 947 Engines

To correct the ignition timing, the data of the MPEM is changed using the MPEM programmer.

Through the MPEM programmer, the ignition timing can be advanced up to 3° or retarded up to 4°.

▼ CAUTION

If the ignition timing is adjusted too advanced, this will cause serious damage to the engine.

The timing mark refer to the physical component position when the spark must occur. The MPEM must be synchronized with the mark. For instance, on a particular engine, the timing correction may need to be advanced to 2° so that the mark aligns with timing mark pointer tool. This is not the real spark advance, just a correction for the tolerances of the mechanical components.

Knowing that, you select with the programmer the higher or lower number to advance or retard the actual timing correction by referring to the following chart.

TIMING CORRECTION CHART	
Programmer Number (MPEM)	Ignition Timing Correction
2	3°
3	2°
4	1°
1	0
5	-1°
6	-2°
7	-3°
8	-4°

Examples:

a. You found the flywheel mark advanced. You must retard the ignition timing.
   - The programmer gives you the number 3. Referring to the chart, number 3 returns a correction of 2° (advanced) and this is too much in this case.
   - You estimate the correction should be set to 1° (advanced) to align flywheel mark. Back in the chart, look to find 1° (advanced). This gives number 4. Enter this number with the programmer.
   - You recheck the timing with the timing light and if the mark is aligned, ignition timing is properly set.

b. You found the flywheel mark advanced. You must retard the ignition timing.
   - The programmer gives you the number 3. Referring to the chart, number 3 returns a correction of 2° (advanced) and this is too much in this case.
   - You estimate the correction should be set to 1° (advanced) to align flywheel mark. Back in the chart, look to find 1° (advanced). This gives number 4. Enter this number with the programmer.
   - You recheck the timing with the timing light and found that the flywheel mark is still too advanced. You know now that the correction made previously was not enough and you estimate the correction should be set to -2° (retarded) to align flywheel mark. Back in the chart, look to find -2° (retarded). This gives number 6. Enter this number with the programmer.
   - You recheck the timing with the timing light and if the mark is aligned, ignition timing is properly set.

c. You found the flywheel mark retarded. You must advance the ignition timing.
   - The programmer gives you the number 4. Referring to the chart, number 4 returns a correction of 1° (advanced) and this is not enough in this case.
   - You estimate the correction should be set to 2° (advanced) to align flywheel mark. Back in the chart, look to find 2° (advanced). This gives number 3. Enter this number with the programmer.
   - You recheck the timing with the timing light and if the mark is aligned, the ignition timing is properly set.

Proceed as follows to adjust the ignition timing with the MPEM programmer:

1. Connect the communication cable to the MPEM programmer and the other end to the safety lanyard switch on the craft.
2. Press the ***ON/C*** button on programmer and enter your password.
3. Press ***3*** to choose ***Vehicle info*** in programmer.
4. Press ***4*** to choose ***Engine param***.
5. Press ***2*** to choose ***Timing adjust***.
6. The programmer will display a number that is stored in the MPEM.
7. Press ⇔ to choose ***yes*** for modify then press ***Enter***.
8. Now punch in the number that corresponds to the degree you want for the ignition timing then press ***Enter***.
9. Press ***Menu*** to go back one level.
10. Press ***8*** to choose ***Save + Quit*** (even if item no. 8 is not visible on the display, it is active when you select it).
11. Press ***Enter*** to confirm yes you want to ***save modifications*** to the MPEM.
12. You must see ***Operation successful***. This confirms that the new timing data has been stored in the MPEM.
13. Unplug communication cable from safety lanyard switch on craft.
14. Press ***Off*** to close the programmer.

At this point, you can install the watercraft safety lanyard and start the engine to check the effect of the correction on the ignition timing. If further adjustment is required, repeat the procedure.

NOTE: The MPEM features a permanent (non-volatile) memory and keeps the ignition timing programmed even when the watercraft battery is disconnected.

SPARK PLUG INFORMATION

Spark plug heat ranges are selected by measuring actual combustion chamber temperatures. A colder spark plug, one that dissipates heat more rapidly, is often required when engines are modified to produce more horsepower.

The proper heat range of the spark plugs is determined by the spark plugs ability to dissipate the heat generated by combustion.

The longer the heat path between the electrode tip to the plug shell, the higher the spark plug operating temperature will be, and inversely, the shorter the heat path, the lower the operating temperature will be.

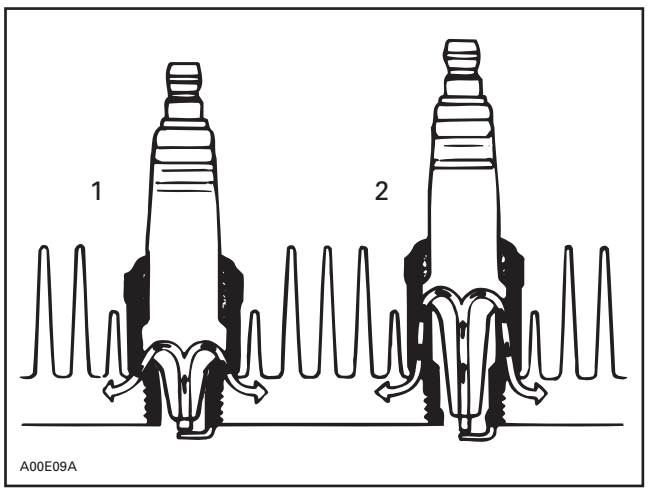

1. Cold
2. Hot

A **cold** type plug has a relatively short insulator nose and transfers heat very rapidly into the cylinder head.

Such a plug is used in heavy duty or continuous high speed operation to avoid overheating.

The **hot** type plug has a longer insulator nose and transfers heat more slowly away from its firing end. It runs hotter and burns off combustion deposits which might tend to foul the plug during prolonged idle or low speed operation.

Generally speaking, if you have increased horsepower by 10-15%, you will have to change to the next colder heat range spark plug.

Sea-Doo watercraft are equipped stock with NGK spark plugs; BR7ES for all 587 engines and BR8ES for all the other engines. The spark plug gap should be 0.5 – 0.6 mm (.020 – .024 in) for all engines.

These are resistor-type plugs which help reduce radio frequency interference.

Design Symbols Used on NGK Spark Plugs

PREFIX: B R

SUFFIX: 8 E S – 15

WIDE GAP
- 10: 1.0 mm (.040")
- 11: 1.1 mm (.044")
- 13: 1.3 mm (.050")
- 14: 1.4 mm (.055")
- 15: 1.5 mm (.060")
- 20: 2.0 mm (.080")

Thread diameter
- A: 18 mm
- B: 14 mm
- C: 10 mm
- D: 12 mm
- E: 8 mm
- J: 12 mm x 19 mm Reach

Construction
- M: Compact Type
- P: Projected Insulator Type
- R: Resistor Type
- U: Surface Discharge
- Z: Inductive Suppressor Type

Heat rating numbers
- 2 Hot
- 4
- 5
- 6
- 7
- 8
- 9
- 10 Cold

Reach
- E: 19 mm (3/4")
- F: Taper Seat
- H: 12.7 mm (1/2")
- L: 11.2 mm (7/16")
- Z: 21 mm (53/54")

Blank
- 18 mm ø 12 mm (31/64")
- 14 mm ø 9.5 mm (3/8")

Firing end construction
- A: Special Design
- B: Single Ground Special Alloy
- C: Dual Ground Special Alloy
- G: Racing Type
- GV: Racing Version of V-Type
- L: Half Heat Range
- S: Standard Center Electrode
- V: Fine Wire Center Electrode
- X: Booster Gap
- Y: V-Grooved Center Electrode

F02H0MS

CROSSCUTS AND GAP STYLES OF SPARK PLUGS

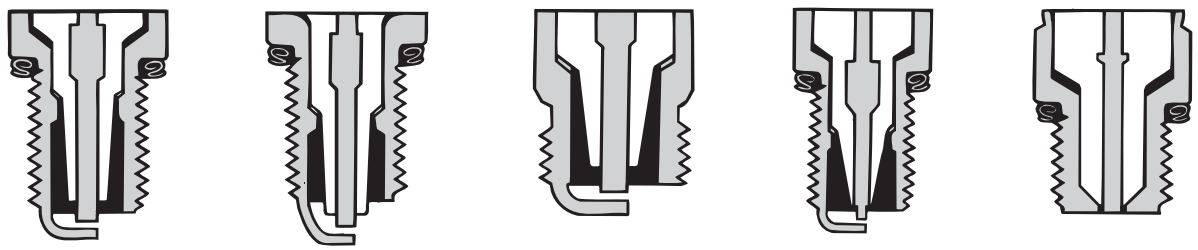

Standard Type | Projected Insulator Type | Taper Seat Type | V-Type | Surface Discharge Type

A01E1PS

MIKUNI BN CARBURETORS

REPRINTED WITH THE AUTHORIZATION OF MIKUNI CORP.

Introduction of the Super BN Carburetor

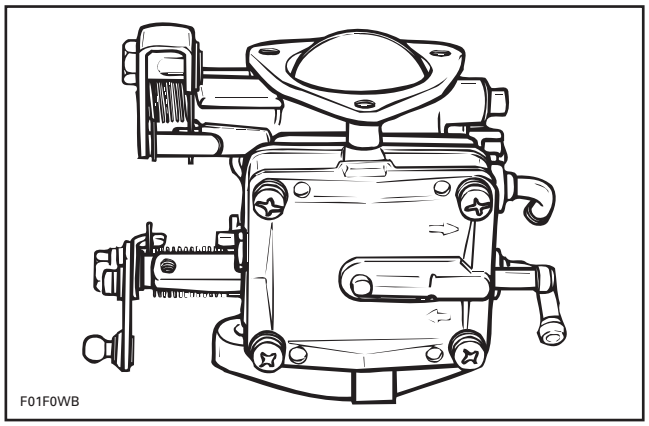

The Super BN carburetor is the latest in a series of watercraft carburetors from Mikuni. The Super BN earns its name because of the increased performance it delivers over previous model Mikuni BN carburetors.

What differentiates the Super BN from its predecessors?

1. The fuel pump and jet sections are separated for easier maintenance.
2. It has an integral fuel filter.
3. The fuel pump capacity is increased by almost 20%.
4. Air flow is increased by 9%.
5. It is easily tunable with replaceable jets (in a wide range of sizes) and an array of other tuning components.

With the introduction of the Super BN Series of carburetors, Mikuni American has made a renewed commitment to the watercraft industry by researching carburetor tuning applications and disseminating this information to the consumer. In the past, jetting information was available through many different sources, but unfortunately there were as many different recommendations as there were sources. With this information we will be able to provide a reliable and consistent source of approved technical details.

Carburetor Installation

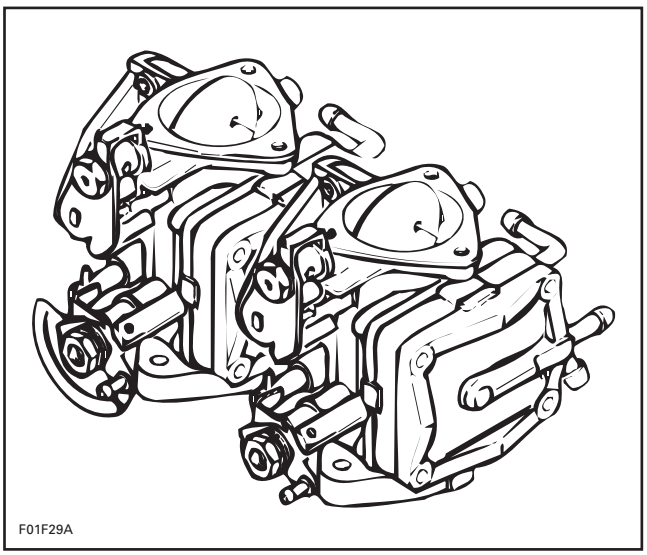

MIKUNI SUPER BN38 DUAL CARBURETOR SET FOR HIGH PERFORMANCE APPLICATIONS

▼ CAUTION

Exercise caution when changing carburetion components and any time you work with the fuel system on your watercraft. Work in a well ventilated area. Do not turn the engine over while fuel lines are disconnected. Immediately clean up any fuel spill that might occur during carb installation.

NOTE: As when installing any performance product, a degree of mechanical ability is required. If after reviewing the parts and instructions you do not feel that you can properly complete this installation, take your watercraft to a competent professional. Proper installation and adjustment will save time, money and aggravation.

NOTE: In most cases your new Super BN Carburetor will be installed in conjunction with an aftermarket manifold and flame arrestor/air filter system. We recommend using this manual, together with the appropriate model year *Shop Manual* for your watercraft, and the instructions from the aftermarket manifold manufacturer to help you with the installation and tuning of the BN carburetor system.

Basic Instructions

1. Use a new gasket between the carburetor(s) and intake manifold.
2. Use flat washers and lock nuts to secure the carburetor(s).
3. Be sure that the fuel lines are of the correct diameter for the carb fittings. Secure all hose connections with cable ties and proper clamps.
4. When installing the throttle cable, be sure to securely tighten the jam nuts. Allow a small amount of free play at the throttle lever. Check to see if the throttle is opened as the handlebar is turned from side to side; correct the cable routing if necessary.

▼ CAUTION

Heavy duty carburetor cleaner may be harmful to rubber parts, O-rings, etc. Therefore, it is recommended to remove those parts prior to cleaning.

▼ CAUTION

Be careful at carburetor cleaning not to remove paint. Paint removal will cause carburetor to corrode very rapidly. Repaint if necessary.

External Components

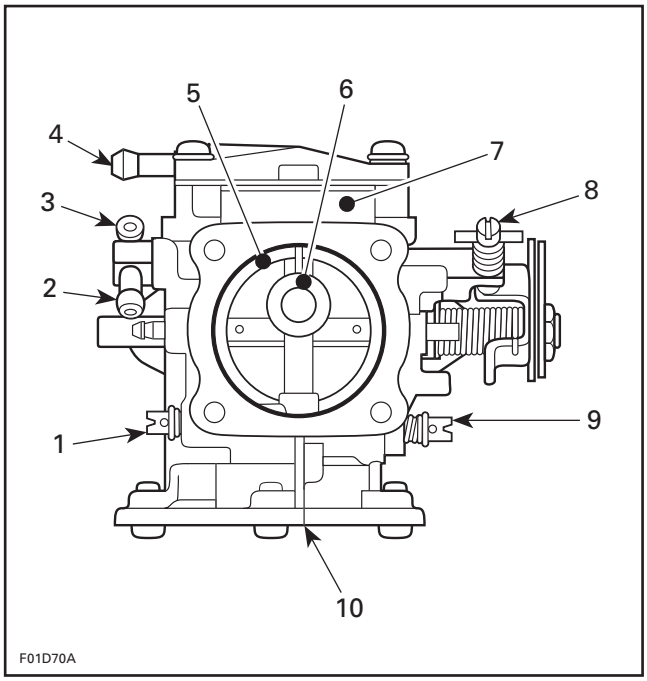

1. High speed screw
2. Fuel return
3. Fuel inlet
4. Pulse nipple
5. Outer venturi
6. Inner venturi
7. Fuel pump assembly
8. Idle stop screw
9. Low speed screw
10. Regulator diaphragm high and low speed jets needle valve assembly

Internal Components

At first look the cutaway drawing (see next page) appears somewhat straight forward, but some interesting things appear as you study it. Follow the fuel flow through the low speed circuit. Fuel flows through the low speed jet and then is divided, with part of the fuel being metered by the low speed screw. An additional route the low speed fuel takes is through the by-pass holes (transition circuit). Fuel is drawn through the by-pass holes as the throttle is opened and the butterfly valve exposes them to the air flow. The ability for fuel to pass through the low speed circuit and its transition is controlled first by pop-off pressure, then by the size of the low speed jet.

NOTE: If the low speed jet size is changed, it affects the mixture both at idle speed and off idle.

Viewing the high speed circuit, notice that fuel is divided at the high speed jet, so that even if the high speed screw was fully closed, fuel would still pass through the jet. The fuel flow chart illustrates the adjustability of total fuel flow with the high speed screw. It is possible, with the Super BN, to adjust the desired fuel flow with the screw closed, by changing the size of the jet alone. In this way, if the screw was used later, the fuel mixture could not get lean enough to cause an engine seizure.

Trace to the needle valve and notice the relationship between the spring and the needle. The spring exerts pressure through the arm onto the needle. The size of the fuel passage hole in the valve seat contributes to the performance of the carb in a couple of different ways. First, and most important, the hole size helps determine pop-off pressure. Four things combine to create pop-off:

1. Suction within the carb (manifold pressure).
2. Atmospheric pressure.
3. Arm spring pressure.
4. Fuel pressure acting on the needle valve.

Hydraulic principles apply in this instance. There is fuel pressure acting against the exposed end of the needle valve with this pressure being measured in PSI. For example, with a 2.0 size needle valve, the fuel pressure pushes against the needle through the opening with a certain force. If you increase the needle valve size to 2.5 and retain the same arm spring, the fuel has a larger surface to push against and can move the needle more easily. So, increasing needle valve size effectively decreases pop-off; conversely, decreasing the size of the needle valve will increase pop-off.

The arm spring is also an adjustable component. There are currently 4 springs available with different gram ratings. You can refer to the pressure chart (further along in this section) to obtain approximate pop-off pressures with spring pressure and needle valve combinations.

NOTE: It is important to NOT select a needle valve that is too small for your application due to the fact that the needle valve can be a limiting factor in maximum fuel flow. In other words, in some applications, engines require more fuel than small needle valves can deliver. The needle valve sizes in Mikuni special set carbs have been carefully selected and should not be decreased. However, in the case of watercraft with very high fuel demands, it may be necessary to increase the needle valve size. Keep in mind that when the needle valve size is changed it will affect the pop-off pressure.

▼ CAUTION

It is recommended that you select an arm spring that is the correct length rather than cutting or stretching an existing spring, the results are more consistent over the long run. Cut or stretched springs tend to change in strength over time.

The anti-siphon valve is located in the valve body assembly, attached directly above the high speed jet. It is responsible for retaining fuel in the fuel chamber when the engine is shut off. When the engine is running, suction will cause the anti-siphon valve to flex, allowing fuel to flow to the jet. If the valve becomes worn or does not seal correctly, the symptoms will appear as a rich condition from 1/2 to full throttle.

The throttle plate is worth a closer look. It's quite obvious that the throttle plate controls the entire operation of the carb. At idle, the throttle plate blocks off almost all air flow through the carb, creating a very high amount of manifold pressure within the carb. This high pressure is one reason that the low speed screw is as sensitive as it is; small adjustments will make a big difference. Notice that when the throttle plate is in the idle position, the bypass holes are actually above the throttle plate (with the carb in the down draft position). The bypass holes are actually having air drawn through them in this position. It isn't until the throttle plate opens over the bypass holes that fuel actually passes through them.

Standard Needle Valve Size for Various Sea-Doo Carburetors

NEEDLE VALVE SIZE	CARBURETOR MODEL
1.2	BN38I-37-17/BN38I-37-18
1.2	BN38I-37-25/BN38I-37-26
1.5	BN40I-38-9/BN40I-38-10
1.5	BN40I-38-15
1.5	BN40I-38-11/BN40I-38-12
2.0	BN38I-37BI
2.0	BN38-34-45B
2.0	BN38-34-58/BN38-34-59
2.0	BN-38-34-64/BN-38-34-65
2.0	BN38-34-73/BN38-34-74
2.0	BN38-34-92/BN38-34-93
2.0	BN38-34-110/BN38-34-111
2.0	BN38-34-147
2.0	BN46I-42-2/BN46I-42-3

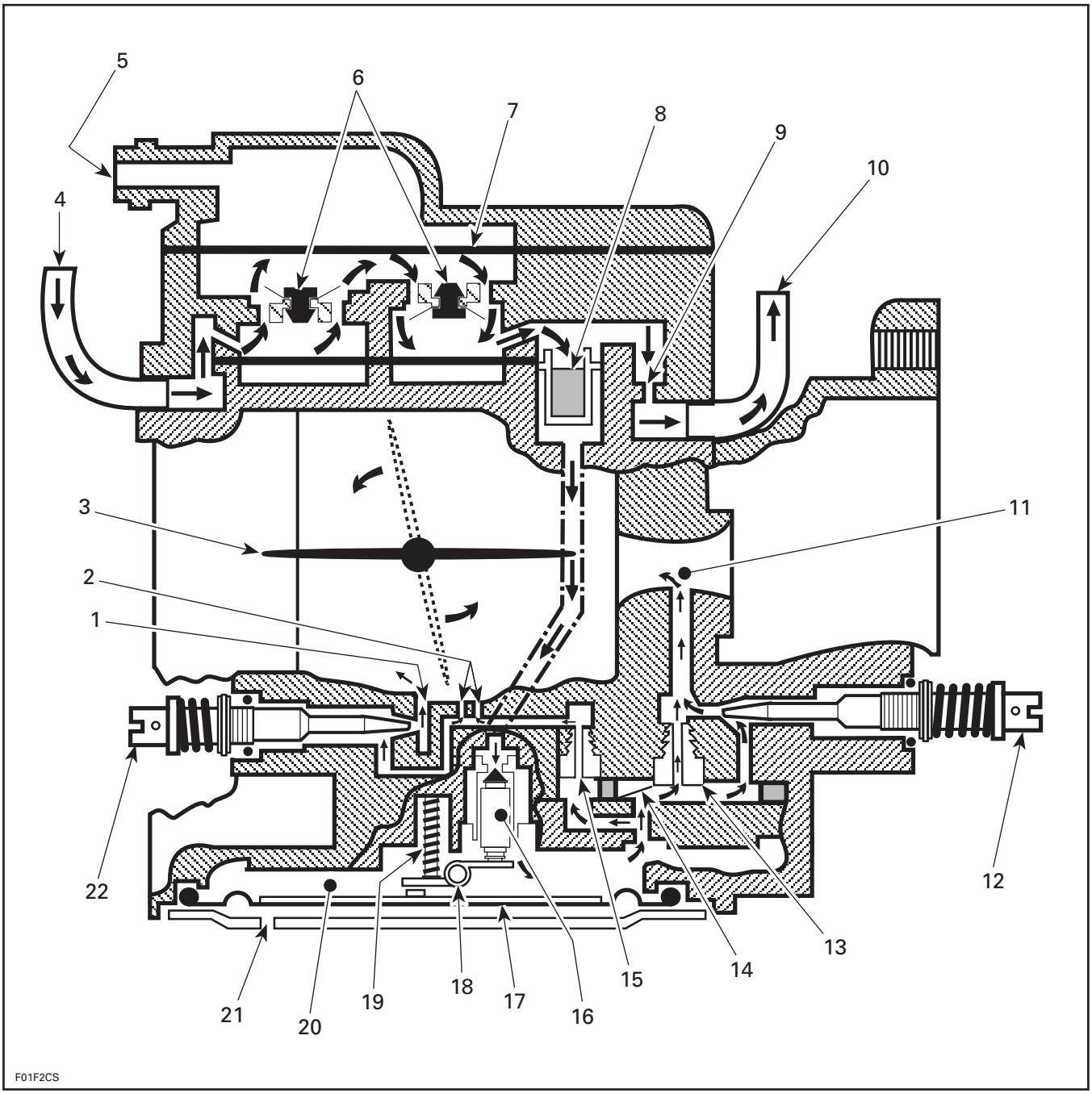

1. Low speed outlet
2. Bypass holes
3. Throttle plate
4. Fuel inlet
5. Pulse
6. Check valves
7. Pump diaphragm
8. Filter
9. Restricter
10. Fuel return
11. Inner venturi
12. High speed screw
13. Main jet
14. Anti-siphon valve
15. Pilot jet
16. Needle valve assembly
17. Regulator diaphragm
18. Arm
19. Arm spring
20. Fuel chamber
21. Vent to atmosphere
22. Low speed screw

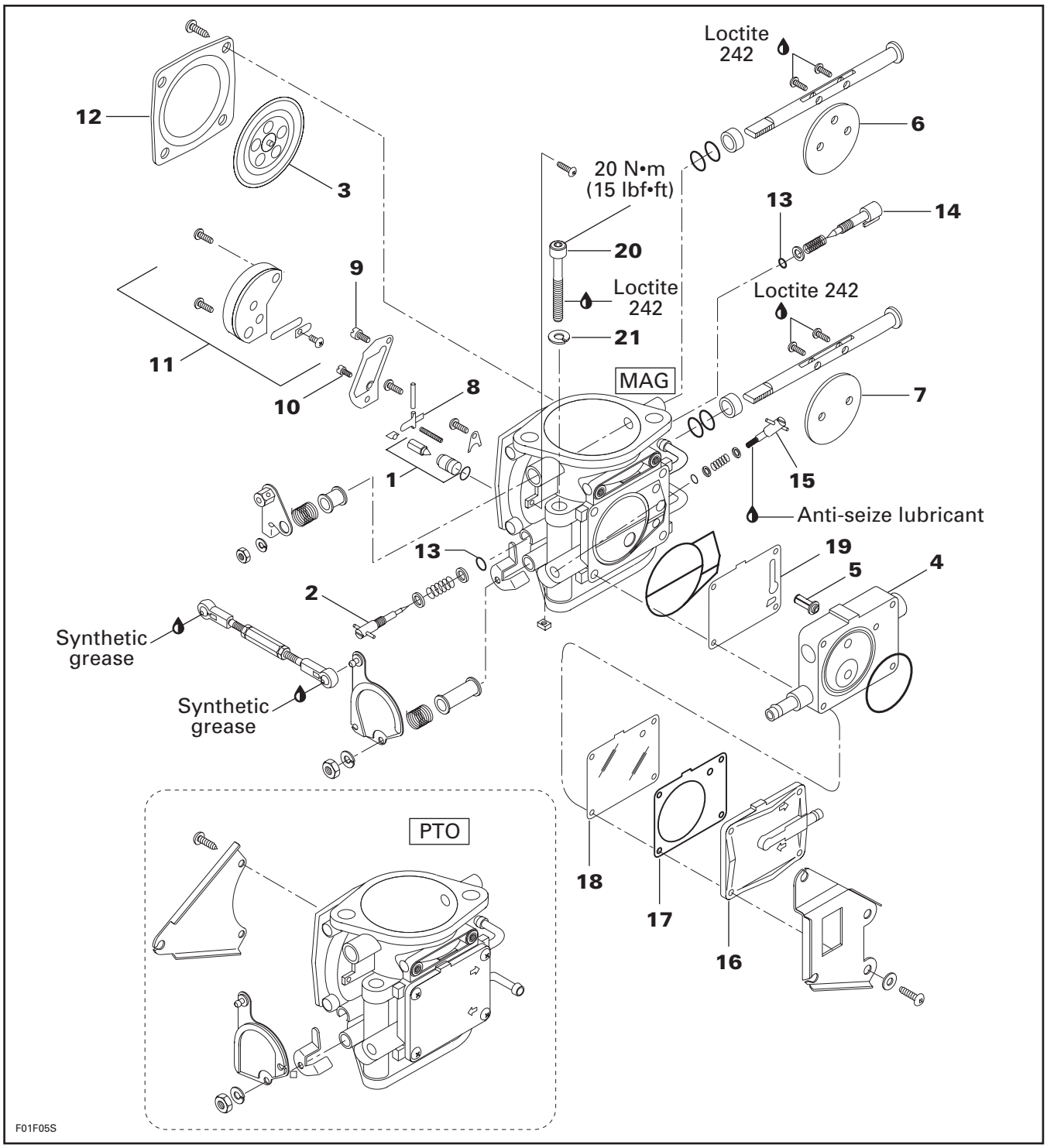

1. Needle valve
2. Low speed screw
3. Diaphragm
4. Pump body
5. Filter
6. Choke plate
7. Throttle plate
8. Arm
9. Main jet
10. Pilot jet
11. Check valve assembly
12. Choke valve
13. O-ring
14. High speed screw
15. Idle speed screw
16. Pump cover
17. Gasket
18. Diaphragm
19. Diaphragm
20. Screw (2 per carb)
21. Lock washer

Carburetor Tuning

Tuning the Super BN carburetor(s) can be a fairly simple matter if you look at it with a logical perspective. As modern and technologically advanced as the Super BN is, it is still a fuel regulator, due to the fact that fuel entry into the carb and fuel delivery is regulated by a spring and diaphragm system. Using the cutaway drawing as a reference, you can see that as fuel is drawn out of the fuel chamber, atmospheric pressure pushes inward on the regulator diaphragm, moving it against the spring pressure on the needle valve arm. When the combined forces, the suction within the carb, the fuel pressure at the needle valve, and the atmospheric pressure are great enough to overcome the arm spring pressure, the needle valve will open, allowing fuel (under pressure from the pump) to enter the fuel chamber. This combined force is commonly referred to as **pop-off** pressure: The force required to **pop** the needle valve **off** the seat.

NOTE: As soon as the fuel chamber has been filled, fuel flow into the chamber ceases and the carb returns excess fuel, via a restriction, to the fuel tank.

There are a number of factors that can modify or change the effectiveness of an engine to overcome this pop-off pressure. The engine's ability to create a strong "suction" signal within the carb, and the outside air pressure are 2 variable factors. Engines can be modified in many ways that can increase, or in most instances, decrease the suction generated. Listed here are examples of changes and the effect on engine suction:

Modified Porting

Modified porting from mild to wild can have the effect (in most cases) of reducing suction at lower throttle openings, and with it, hindering carburetion and clean running in the engine's lower RPM range. Hopefully the porting is good and will increase air flow at higher RPM's for better carburetor response and increased power.

Freer Exhaust Systems

Freer exhaust systems decrease suction. Even though they flow more freely, they reduce manifold pressure within the carb. Manifold pressure is a way of measuring the strength of engine suction. Although air flow is increased initially, there isn't enough air flow until high engine speeds to replace manifold pressure.

Freer Air Intake Systems

Free flowing (unrestricted) air intakes increase air flow, but once again, at low throttle openings may reduce manifold pressure. Increasing air flow is a good thing, but, be aware that adjustments have to be made in your carb to compensate for pressure changes.

Atmospheric Pressure

Atmospheric pressure changes with altitude and temperature. BN carbs adjust automatically to minor changes in either altitude or temperature in this way: As air thins out, for example, less air is drawn through the engine, which enrichens the air/fuel mixture, but, there is also less pressure acting on the regulator diaphragm; this tends to lean the air/fuel mixture. These 2 factors off-set each other to a small degree, but this effect must be taken into account when you consider readjustment for a large change in altitude or temperature.

Needle Valve Arm

Needle valve arm adjustment is from the top surface of the arm being level with the cast surface of the carb, to a maximum of the surface of the arm raised 1 mm (.040") above the carb surface. The arm is a convenient way to make minor adjustments in pop-off pressures. Bending the arm upwards by the mentioned 1 mm (.040") will noticeably decrease pop-off pressure.

Idle Stop Screw

Idle stop screw adjusts the idle speed (RPM) by opening or closing the throttle plate (butterfly). Refer to your *Operator's Guide* for the correct idle speed for your watercraft. As a rule of thumb, adjust the idle to approximately 1100 RPM.

Low Speed Screw

Low speed screw is used in conjunction with the idle stop screw to maintain idle speed and smoothness. Use the low speed screw to adjust the smoothness of the idle. Experiment turning the low speed screw in and out in small increments until a smooth idle is obtained. As the idle stop screw is turned in or out to raise or lower idle speed, the low speed mixture is also affected. The low speed screw is very sensitive and adjustments should be made in small increments only. For clarification, if the idle stop screw is turned out to lower idle speed, the low speed air/fuel mixture will richen slightly and a small adjustment will need to be made with the low speed screw inward to compensate.

NOTE: To get a good "feel" for the correct low speed adjustment, experiment with the idle stop and low speed screws. You will find that a small adjustment with one of the screws requires and equal readjustment of the other. **Correct low speed adjustment will result in improved throttle response.**

Transition Circuit

Transition circuit is made up of the low speed screw, pilot jet, bypass holes and pop-off pressure. To adjust the transition circuit, change the pilot jet or pop-off pressure. If a slight lean or rich condition exists while accelerating from just off idle to half throttle, change the pilot jet. Increasing the jet size will richen the mixture. Make any jet changes in small increments of jet sizes. If a severely lean or rich condition exists in transition, it will be necessary to readjust the pop-off pressure. Refer to the pop-off chart to determine how to change components for pop-off adjustment.

NOTE: To accurately check and adjust pop-off pressure, it will be necessary to use a pump gauge tester (P/N 295 000 114), which is available through your dealer. The pop-off chart in this section is for approximating pressure only.

High Speed Screw

High speed screw adjusts the air/fuel mixture, in conjunction with the main jet, for maximum full throttle performance. The initial setting for the high speed screw is closed. If you are uncertain that this setting will provide enough fuel, do not hesitate to start with the screw out more turns. Turning the screw clockwise (inward) will lean the mixture, counterclockwise will richen the mixture. The high speed screw is effective up to 3 full turns out. The plastic cap must be removed for adjustments over 1/4 turn.

Manifold Pressure

Manifold pressure is the **suction** generated by the engine against a restriction; the strength of this suction is measured in inches of mercury. In the case of the Mikuni BN carburetor, the main restriction is considered to be the throttle plate. When the throttle plate is closed, it offers the greatest amount of restriction and manifold pressure is high. As the throttle plate is opened, the restriction is reduced and manifold pressure decreases.

The carburetor sees manifold pressure as a potentially strong suction drawing on any exposed openings within the carb. As the throttle is opened, more internal openings are exposed to this suction. To begin with, only the low speed fuel outlet is exposed, but as the throttle is opened further, the bypass holes and the high speed fuel from the inner venturi are exposed to the suction. At this point, with the throttle wide open, if there was no fuel in the carb, the engine would not rev up and because the throttle plate was open fully, the manifold pressure would be very low. However, we do have fuel and the engine does rev, drawing an increasing amount of air velocity through the carb. As the air velocity through the carb increases, it replaces manifold pressure as the **suction** force within the carburetor.

What are the dynamics of manifold pressure and air velocity? As the engine is idling we know that manifold pressure is high and there is good signal strength within the carb, which makes adjustment easy. As the throttle is opened quickly, manifold pressure disappears and if the jetting within the carb is correct, the engine revs quickly and air velocity increases to accelerate you on your way.

Now you can see the importance of the transition circuit; it is there to aid in the transition from high manifold pressure to high air velocity. **Correct adjustment of the transition circuit is vital to smooth acceleration and good performance.**

Testing Pop-off Pressure

Testing pop-off pressure requires a pump gauge tester such as the one available from Bombardier.

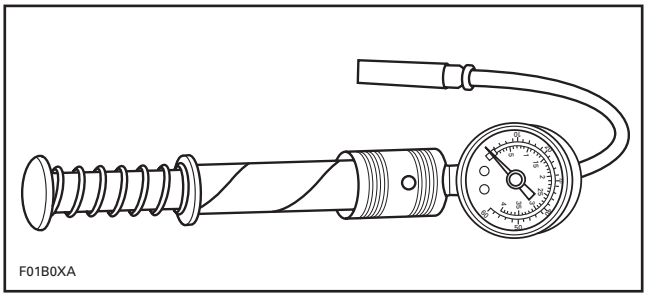

PUMP GAUGE TESTER (P/N 295 000 114)

The gauge should be calibrated in at least 1/2 PSI increments and read up to 30 PSI. The readings taken from the gauge are used for comparison before and after changes, so the actual accuracy of the gauge is not critical.

The pop-off pressure chart in this section shows very accurate PSI values between needle valve sizes and spring pressures. Before making any changes in pop-off, test your carb and see how it compares to the chart.

Steps in Testing:

1. Attach the pump hose to the fuel inlet on the carb.
2. Cover, or in some way completely plug the fuel return line.
3. It is recommended that the regulator diaphragm and its cover be removed during testing.
4. During testing, it is important to obtain consistent readings. To accomplish this, it is necessary to keep the needle valve wet. Use BOMBARDIER LUBE (P/N 293 600 016) to wet the needle valve.

▼ CAUTION

Do not use gasoline due to the hazard of fire. Protect your eyes from the spray when the needle valve pops-off.

5. Pressurize the carb with the pump until the needle valve pops-off. Check at what pressure the valve closes and seals. This illustrates quality of valve sealing. Test the valve at least 3 times to assure an accurate reading. Be sure to keep the needle valve wet.

The reason for wetting the needle valve is to duplicate actual conditions during operation. When the engine is running, the needle valve has gasoline running through to wet it and engine vibrations to actually help the needle obtain a good seal.

As you adjust pop-off pressure to tune your carb, make changes in small increments only (approximately 2 PSI) because small changes in pop-off can equate to big differences in engine performance. **Increasing or decreasing pop-off dramatically affects how the low speed jet performs. Pop-off enhances the fuel flow of the pilot jet.** Example: The pilot jet is a no. 100 and the pop-off is 16 PSI. If the pop-off is increased to 20 PSI, the amount of fuel that passes through the jet decreases even though the jet size remains unchanged. If the pop-off was decreased to 13 PSI, the no. 100 jet would flow proportionally more fuel. The pilot jet and pop-off work together in the transition circuit. As a rule of thumb, **adjusting pop-off is for making big changes in the transition circuit, the pilot jet is used for fine tuning.**

What we have been considering and learning is pop-off pressure, what it is and what affects it. What effect does this have on your fuel system? Pop-off pressure controls throttle response from just off idle until approximately 1/2 throttle. As a rule of thumb, piston ported and rotary valve engines use generally higher pop-off pressures, as where reed valve engines require lower pop-off pressures.

Spring Selection

When changing the pop-off pressure, it is recommended that you select a spring from the chart that combines with your needle valve size to obtain the desired pressure. If no spring size is appropriate, it is acceptable to take a spring of greater pressure and cut it shorter to achieve the correct pop-off. Use your gauge to verify the pop-off. Do not stretch lesser springs to increase pressure, as the metal has a memory and will eventually shrink back to its original size.

Pop-off Pressure Chart

Needle Valve Size	Arm Spring			
	115 g	95 g	80 g	65 g
1.5	55 PSI	43 PSI	38 PSI	32 PSI
2.0	32 PSI	25 PSI	21 PSI	18 PSI
2.3	22 PSI	20 PSI	17 PSI	15 PSI
2.5	19 PSI	17 PSI	14 PSI	12 PSI

Fuel Flow Chart

NOTE: This chart depicts the approximate amount of fuel that each circuit contributes to the total fuel flow of the Super BN'S. Fuel flow is in percentage.

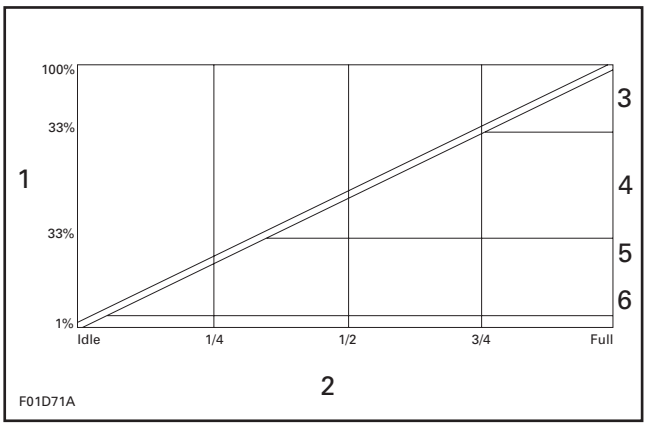

1. *% of total fuel flow*
2. *Throttle position*
3. *High speed screw*
4. *Main jet*
5. *Transition circuit*
6. *Low speed screw*

Low Speed Circuit

Low speed circuit contributes fuel all the way to full throttle. All fuel circuits within the carb work in this manner: as the throttle opens, each circuit in turn contributes to the total fuel requirements of the engine.

Transition Circuit

Transition circuit controls the fuel flow for a smooth "transition" to the high speed circuit. If the transition circuit is far enough out of adjustment, it may become difficult to get to the high speed circuit and the engine will not rev up.

High Speed Circuit

High speed circuit controls the fuel flow in addition to the low speed and transition circuits. The high speed screw can control up to as much as 1/2 of the fuel delivered by the high speed circuit, depending on the relative size of the high speed jet. This adjustability allows for a wide range of tuning without changing an internal jet.

Jetting

The oxygen content of air varies with different atmospheric conditions. Cool, dry air at a high barometric pressure has more oxygen molecules per cubic foot than does hot moist air at low barometric pressure readings. Hot air expands; therefore, there are less oxygen molecules per cubit foot. At low barometric pressure also allows air to expand. An increase in altitude results in a decrease in barometric pressure. Air with high humidity has more water molecules which take up space so there is less room for oxygen molecules. Since oxygen is what is needed to mix fuel to provide a burnable mixture, changing atmospheric conditions will require a change in fuel flow.

Pilot and main jets are replaceable. Different jet sizes are available to suit altitude and/or temperature conditions. Different jetting may be required as engine performance is increased.

Always inspect spark plug and piston dome color before selecting jetting options. Spark plug or piston dome color is an indication of carburetion mixture conditions.

Dark brown or black coloration indicates a rich condition, while light tan or white indicates a lean condition. Medium brown coloration may indicate a correct jetting range.

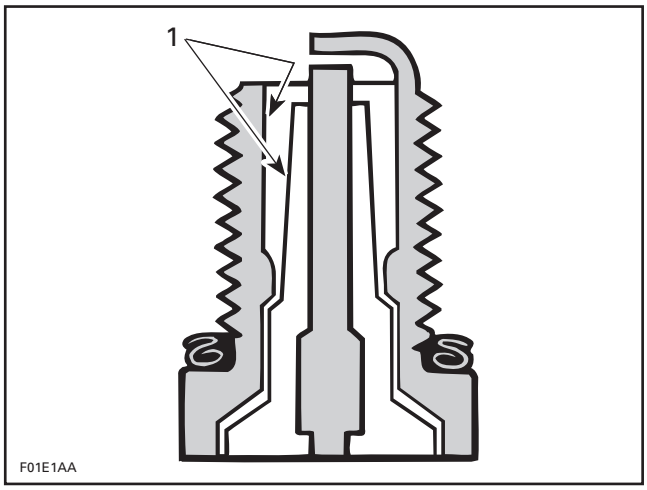

1. Location to check spark plug coloration

Refer to the appropriate *Shop Manual* of your watercraft for instructions on changing carburetor jetting.

Main Jets for Mikuni Super BN Carburetors

MAIN JET SIZE	PART NUMBER
102.5	270 500 157
105	270 500 158
107.5	270 500 116
110	270 500 159
115	270 500 181
120	270 500 160
122.5	270 500 161
125	270 500 162
127.5	270 500 148
130	270 500 163
132.5	270 500 225
135	270 500 174
137.5	270 500 268
140	270 500 251
142.5	270 500 209
147.5	270 500 210
175	270 500 318

Pilot Jets for Mikuni Super BN Carburetors

PILOT JET SIZE	PART NUMBER
55	270 500 202
57.5	270 500 201
60	270 500 180
62.5	270 500 164
65	270 500 117
67.5	370 500 165
70	270 500 175
72.5	270 500 166
75	270 500 149
77.5	270 500 167

If in doubt with carburetion jetting, always begin with a rich setting and work toward a lean adjustment.

NOTE: It is recommended you always race with your fuel tank valve on the "reserve" position. This should eliminate any possibility of air entering in the fuel system should the fuel tank level be lower than a quarter full.

RACING ENGINE PREPARATION SUMMARY

NOTE: Most machining and/or grinding is illegal in limited class racing. Keep your watercraft legal: check the rules.

1. Remove and disassemble the engine according to appropriate model year *Shop Manual* procedures.
2. With the crankshaft resting in the lower half of the crankcase, set up a dial indicator and check the runout of the crankshaft at both ends. You should see no more than 0.05 mm (.002 in) runout. If you have the capability, adjust the crankshaft as close to perfect as possible.

Most machining or grinding is illegal in the Limited Class. Ports or cylinder liners may not be modified in any way.

In the Superstock Class base gaskets and head gasket surfaces of the cylinder may be machined a maximum of 1.00 mm (.040 inches). Port widths, heights, and shapes may be altered, but no ports may be added or deleted. Aftermarket cylinder liners may be used. KEEP YOUR WATERCRAFT LEGAL — CHECK THE RULE BOOK.

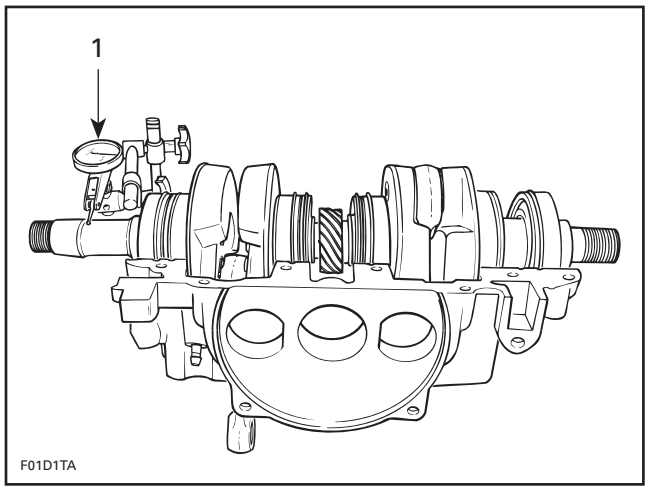

1. Measuring MAG side deflection in crankcase

3. Set your cylinder base gaskets and cylinders on the upper half of the crankcase, and lightly torque the cylinders to the case half. Be sure to install exhaust manifold on the cylinders before tightening them to the upper crankcase half, to ensure the same position of the cylinders on final assembly.

   Check the match of the gaskets and cylinders to the base; match them perfectly with a die grinder in the areas of transfer port passages. Also check for any overlap of the exhaust manifold gaskets where the exhaust manifold joins the cylinders. Before reassembling, make sure that parts are free of any dust or particles.

4. Check port alignment between the cylinder casting and the sleeve. If the sleeve is off in one direction on all ports, heat the cylinder in the oven at 176°C (350°F) for 45 minutes. Drop a rag that has been soaked in ice water into the sleeve, and quickly align the sleeve with the cylinder casting. Apply constant pressure with some type of heavy object not affected by extreme heat to the top of the sleeve while letting the sleeve and cylinder cool down at room temperature.

5. Check piston to cylinder clearances, ring end gap, cylinder taper and out of round. Check compression ratios, and squish areas of both cylinders. Make sure that they are equal to each other in both respects, and that the proper fuel is used for the compression ratio and squish area of the engine.

6. Assemble the engine using the correct sealants where specified. Rotary valve timing should be correctly set for your application. Refer to FUNCTION OF THE ROTARY VALVE INTAKE SYSTEM in this section. For maximum power output, a dual carburetor setup should be used. When converting a single carburetor engine to a dual carburetor type, some very important changes need to be made; the rotary valve cover, intake manifold, intake manifold O-ring, flame arrester and housing, throttle cable and other hardware must be changed. Also, a labyrinth sleeve should be installed on the crankshaft PTO side. The carburetor from a single type set-up cannot be used in a dual carburetor application.

7. Check the match of mating surfaces through out entire engine exhaust system. Smooth or blend in any mismatched mating surfaces if allowed by your racing association rules.

8. The engine should be pressure tested for leakage.

9. Adjust ignition timing to the recommended advance Before Top Dead Center. All 1992 and up engines (except the XP 5852/5854 and engines equipped with a DC-CDI system) are equipped with a single magneto coil and may need to be changed to either the 1991 ignition or XP 5852/5854 dual magneto coil ignition. If the engine maximum RPM has been increased due to impeller changes, it would be advantageous to use the dual magneto coil because the advance curve of the ignition will be better suited to the higher RPM. Ensure that the rev limiter is properly calibrated for the RPM range you wish to operate your engine. When choosing a peak operating RPM it is very important to avoid operating an engine at certain RPM's for extended periods. For the 587 engine, 6800 RPM is the maximum harmonic imbalance, and 7400 RPM for the 657 type. If the engines are run constantly at these RPM's, serious engine damage may occur. The 787 and 947 engines are equipped with a balancer shaft to prevent this occurrence.

10. Synchronize the carburetors and set the idle according to the appropriate model year *Shop Manual*; then, synchronize the oil pump arm. At wide open throttle, the fuel/oil ratio delivered by the oil pump is 40: 1. If additional oil is desired, pre-mix a quantity of oil with the fuel to achieve the desired fuel/oil ratio.
11. Ensure that carburetor calibration is correct. Refer to carburetor tuning in this section as a tuning guide and reference for available jets.
12. Break-in your freshly built engine. All the meticulous work that you have done could be for little or no gain if the engine is not properly broken-in. Follow the directions for engine break-in procedure as outlined in this section, and your engine will deliver more power, longer.

USING A RADAR GUN FOR TUNING

Using a radar gun is an accurate way to determine the performance of a race craft. If you plan to purchase a radar gun for testing be sure to buy one that is designed for testing watercraft. These radar guns have a digital "marine filter" that eliminates problems caused by waves and ripples in the water. It is also important to purchase a gun that measures the rate of acceleration.

Proper use of a radar gun is necessary to get accurate and consistent readings. One of the most common mistakes that is made with radar guns is shooting the target from an angle. In order to be accurate you must shoot in the line of travel. At a 15 degree angle measurements are only off by about three-tenths of a percent. At 20 degrees it is off by seven percent and at a 45 degree angle it is off by approximately thirty percent. It is easier and safer to get an accurate reading when the watercraft is heading away from you. If it is necessary to do head in readings try to keep the angle as small as possible.

Many factors cause readings to vary, for example sitting on a rocking boat or from moving objects or electrical devises. If you expect interference change your position. It is difficult to get good readings in choppy water, do smooth water testing when ever possible. A spike in the speed can be caused by the rider standing or changing position while the craft is being tested. Excessive spray can also confuse a radar gun, it is recommended that you perform your test in the direction that creates the least spray from the watercraft. The speed of a watercraft does vary at wide open throttle and this will be registered by the radar gun. Do repeated runs, use the right filter, and average the results to give you a precise idea of how your craft is performing.

Keep in mind that acceleration is as important, or in some cases, more important than top speed. This depends on the type of race course the watercraft will compete on. On short courses acceleration is very important, where in an off-shore race top speed is a priority.

TABLE OF CONTENTS

BASIC FUNCTIONS OF THE SYSTEM 04-2
PROPULSION SYSTEM ANALYSIS 04-2
VENTILATION (AIR LEAK) 04-3
CAVITATION 04-4
IMPELLER 04-4
IMPELLER APPLICATION CHART 04-7
IMPELLER SPECIFICATIONS AND BOOT APPLICATIONS 04-9
IMPELLER PITCH CHART 04-10
ENGINE/JET PUMP ALIGNMENT 04-11
FUNCTIONS OF THE VARIABLE TRIM SYSTEM (VTS) 04-12
PROPULSION SYSTEM MAINTENANCE 04-13

BASIC FUNCTIONS OF THE SYSTEM

The following is a brief explanation of some of the principals behind a water jet drive system. As the impeller begins to turn (with the rotation of the engine) it will move a volume of water through the pump housing into the venturi section or venturi. As the volume of water is forced through the smaller cross section, it will be accelerated in flow, thus creating thrust or forward propulsion. However, the volume in and volume out remain the same. While the venturi section of the pump is not technically impressive or complicated in appearance, its simple shape and diameter are very crucial to pump performance. A small increase of the venturi outlet diameter will reduce watercraft top speed but improve acceleration at lower speeds. Conversely, a small decrease in venturi outlet diameter will reduce low speed acceleration but improve top speed. After exiting the venturi, the water passes through a steering nozzle where it can be directed right or left to turn the watercraft. Understanding the basic function of a jet pump should make it easy to realize that steering control is only accomplished under thrust. Steering control at lower speeds or idle is minimized.

Always keep in mind that as the throttle lever is released, less directional control will be available.

To control or steer the watercraft, throttle must be applied.

PROPULSION SYSTEM ANALYSIS

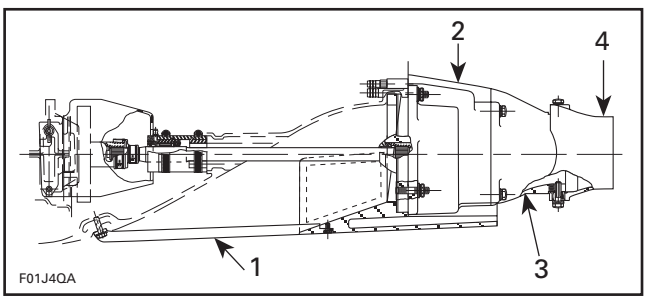

1. *Water inlet*
2. *Axial flow jet pump*
3. *Venturi*
4. *Nozzle*

Water Inlet

The function of the inlet is to carry the water to the jet pump with minimum loss. Another very important function is to assist the jet pump in transforming water volume into thrust.

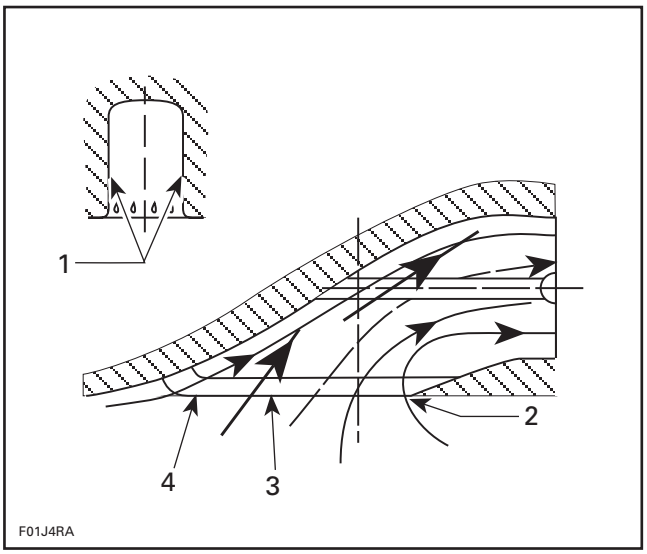

1. *Ride shoe and hull sealed and blended*
2. *Sealed and blended*
3. *Water flow inside of the inlet*
4. *Sealed and blended intake grate*

The intake grate must be properly installed and blend in with the hull and ride plate to eliminate any possible inlet flow restrictions. The water inlet and ride plate must have the surfaces sealed and blended. Certain aftermarket intake grates will enhance the performance of your watercraft. Selecting the correct intake grate will depend on your intended use and type of racing. A careful choice is highly suggested.

NOTE: Race legal intake grates may not extend more than 12 mm (0.473 in) below the flat plane surface of the pump intake area.

Axial Flow Jet Pump

The Bombardier Formula Jet pump is an axial flow, single stage design. This term “axial flow” is defined as a single impeller axially driven by a centrally located shaft. The impeller will transfer a designated volume of water each revolution through the pump.

The axial flow jet pump characteristics are:

– low pressure

– high flow

– small size of pump

– high RPM

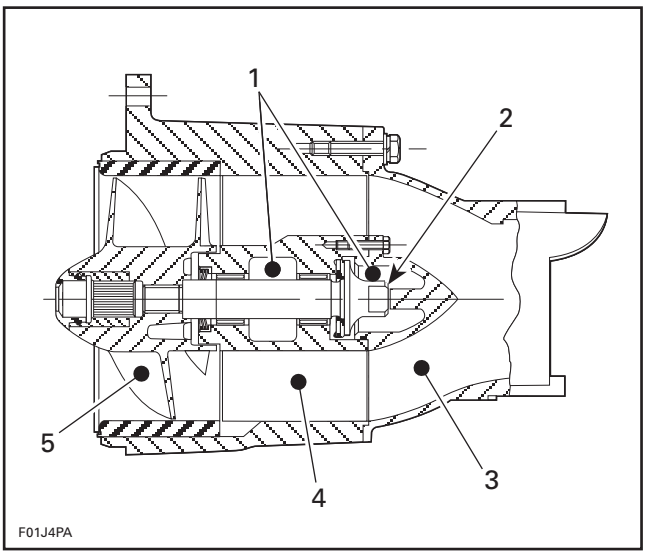

1. *Oil reservoirs*
2. *Impeller shaft end play*
3. *Venturi*
4. *Stator vanes*
5. *Impeller*

NOTE: Watercraft models equipped from the factory with the new composite jet pump housing can not legally use the aluminum type housing from previous models for IJSBA competition events.

Impeller

The impeller is enclosed in the housing and it creates a dynamic force. The thrust created by the impeller alone is minor, but it has a high power absorption. The stator vane and venturi are essential to create thrust and to straighten out twisted water coming of spinning impeller.

Stator

The function of the stator is to transform the dynamic force created by the impeller into forward thrust.

The design principle is similar to the impeller although the stator vanes are in a fixed position.

Venturi

The venturi function is to increase the fluid velocity using static pressure to generate the thrust. Without the venturi, there would be very little thrust. The venturi outlet diameter can be adjusted to compliment the engine tuning and impeller you have selected. Generally speaking, a slightly larger (1-2 mm) outlet will improve acceleration and should give better performance for closed course competition.

Nozzle

The handlebar pivots the jet pump nozzle which controls the watercraft direction.

These 2 items, the handlebar and nozzle, must be adjusted properly to obtain optimum control of the watercraft.

The steering system alignment is most important to ensure the adequate control of the watercraft.

◆ WARNING

Ensure handlebar and jet pump nozzle operate freely from side to side and that jet pump nozzle does not contact the side of venturi housing.

For alignment procedures, refer to appropriate model year *Shop Manual*.

VENTILATION (AIR LEAK)

Ventilation is caused by air being sucked through jet pump which will reduce performance of the pump. Pump ventilation reduces acceleration and will be most noticeable during initial and low speed accelerations. Engine RPM will increase tremendously with very little increase in watercraft speed. This condition feels much the same as a slipping clutch in a car or motorcycle.

Jet pump ventilation is commonly traced to a poor seal between ride shoe and hull.

To determine if jet pump is ventilating, first verify the following:

– Verify if the watercraft accelerates quickly when depressing throttle lever.
– Verify if the engine has a consistent top RPM.
– Verify impeller, impeller wear ring and pump housing for wear and/or damage, or if debris is caught in the grate or around drive shaft.

◆ WARNING

Always remove the safety lanyard from watercraft prior cleaning the propulsion system, to avoid any accidental engine starting.

If everything is in good order but the watercraft does not accelerate quickly when depressing the throttle lever and a good top speed cannot be obtained, the pump is probably ventilating; then, the ride shoe must be removed and resealed to the hull. Refer to appropriate model year *Shop Manual*.

NOTE: When resealing ride shoe ensure to eliminate any possible flow restriction (excessive sealer build up). Use the silicone "Ultra Black HB" (P/N 293 800 028), which has the fastest curing time.

CAVITATION

Cavitation can be defined as a phenomenon where the water inside the inlet or pump becomes incapable of keeping up with the flow. Therefore a negative pressure within the system occurs creating gas vapor and ultimately cavitation. As these gas vapor bubbles implode, they generate enough force to remove microscopic particles of material within the pump assembly. This usually can be seen in the form of discolored areas or trails within the pump assembly (on the stator vanes or impeller). These areas look as though they have been sand-blasted.

A certain degree of cavitation is an accepted occurrence with a water jet propulsion system. However, some changes within the pump can reduce cavitation, such as replacing a thick bladed aluminum impeller with a thin bladed stainless steel impeller; removing any scratches or dents in the housing/impeller, or replacing wear ring if worn.

Chamfer and/or radius leading edges of stator vanes.

Using a straight file, break the square edge on both sides of stator vane to about 1.3 mm (.050 in) wide, then use about a 2 foot strip of 1 inch wide sandpaper (100 grit min.) and drape sandpaper over stator vane area already filed by placing one end of sandpaper in one tunnel and the other end in the tunnel directly adjacent to the first and finish dressing the leading edge. This procedure should be done to both the leading and trailing edges of stator vanes.

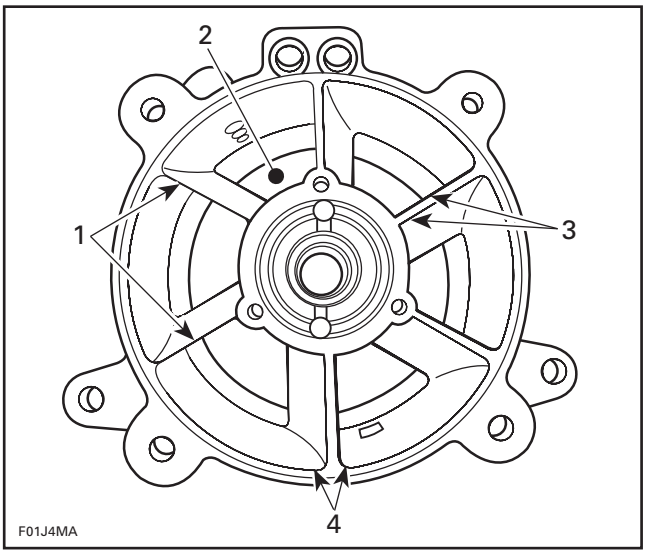

1. *Reworked vanes*
2. *Tunnel*
3. *Break these edges slightly*
4. *Be careful not to make a sharp or square corner in these areas*

It is important to realize that water conditions and repeated accelerations will increase cavitation.

Verify if engine speed is high but watercraft moves slowly due to reduced jet thrust. Check jet pump components for damage.

Refer to appropriate model year *Shop Manual*.

IMPELLER

Two types of impellers can be installed in the jet pump, the regular fixed pitch and the progressive pitch impellers. The meaning of the term "pitch" is the angle between the edge of the blade and the surface on which the impeller is sitting on, or the angle at which impeller moves the water.

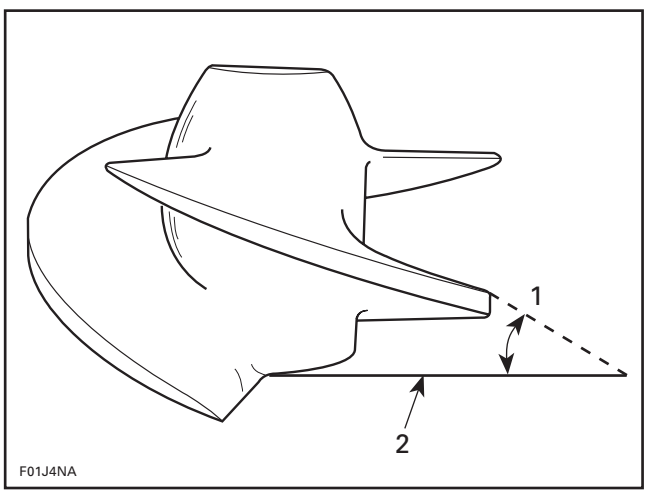

1. *Angle*
2. *Flat surface*

Regular Fixed Pitch

The impeller pitch remains constant on all the blades. The blades are straight with the same angle from leading to trailing edges.

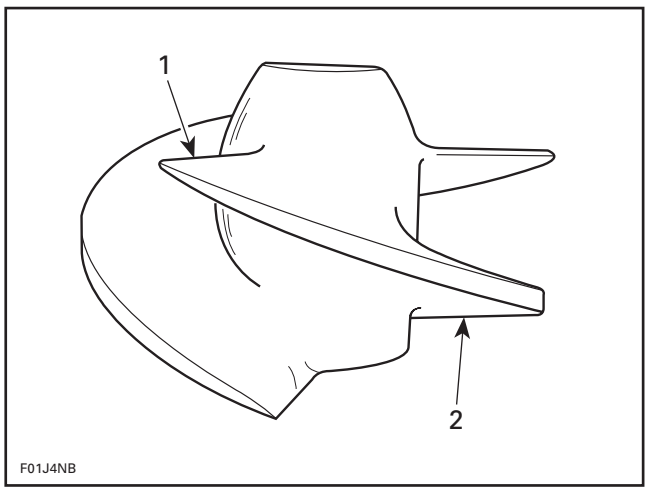

1. Leading edge
2. Trailing edge

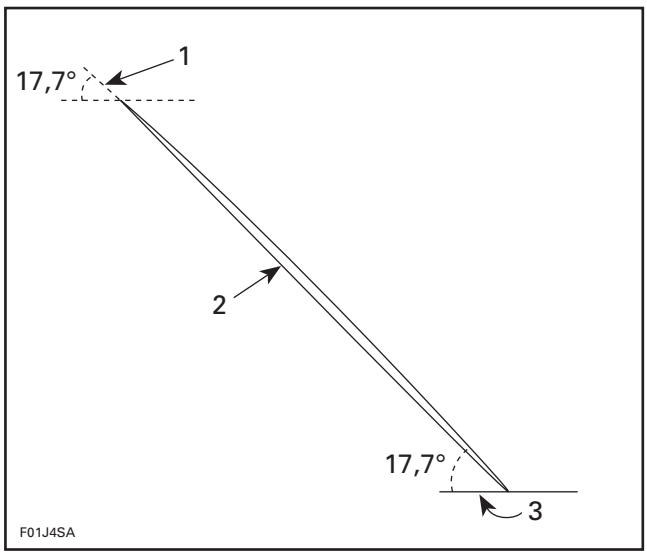

1. Leading edge
2. Straight blade
3. Trailing edge

Progressive Pitch

The impeller pitch changes progressively on each blade. The blades are bent **constantly or asymmetrically** with different angles at leading and trailing edges. The blade bending is done by using a special fixture.

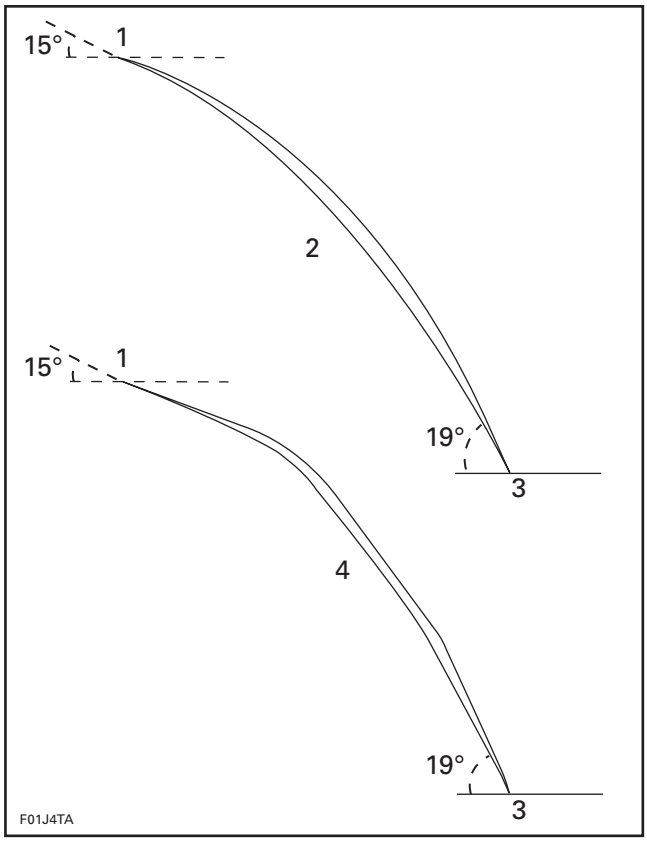

1. Leading edge
2. Constant bend
3. Trailing edge
4. Asymmetrical bend

A low pitch leading edge is important for good acceleration and a higher pitch on trailing edge will give better top speed.

Impeller Efficiency

The impeller efficiency is related to several parameters:

- hydrodynamic blade design
- incidence angle
- turbulence created at the inlet
- pre-rotation of water
- relative circulation
- eddy
- friction
- cavitation

Impeller/Wear Ring Clearance

This clearance is critical for jet pump performance. Excessive clearance will result in decreased performance.

Clearance can be checked from water inlet opening, after inlet grate removal, or from venturi side after venturi/nozzle assembly removal. This last method may be more difficult.

◆ WARNING

Always remove the safety lanyard from watercraft prior verifying the impeller/wear ring clearance to avoid any accidental engine starting.

Using a long feeler gauge 30 cm (12 in), measure clearance between impeller blade tip and wear ring. Measure each blade at its center. Clearance should not exceed 0.5 mm (.020 in). If clearance is greater, disassemble jet pump and inspect impeller and wear ring. Replace worn parts. Refer to appropriate model year *Shop Manual*.

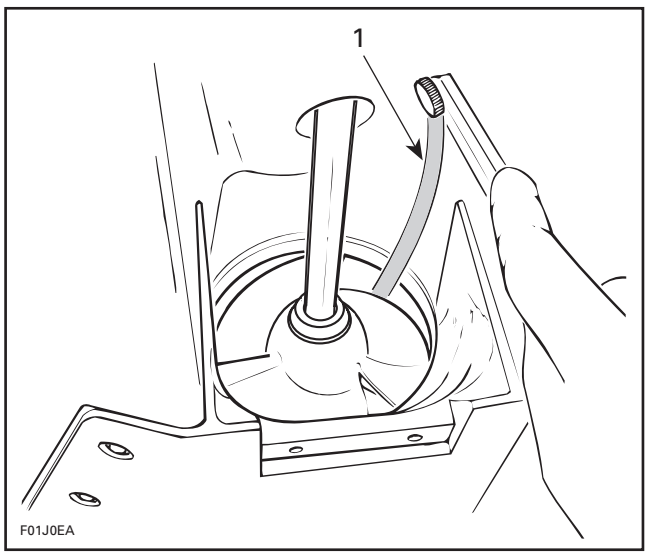

TYPICAL — MEASURING FROM WATER INLET SIDE

1. *Feeler gauge*

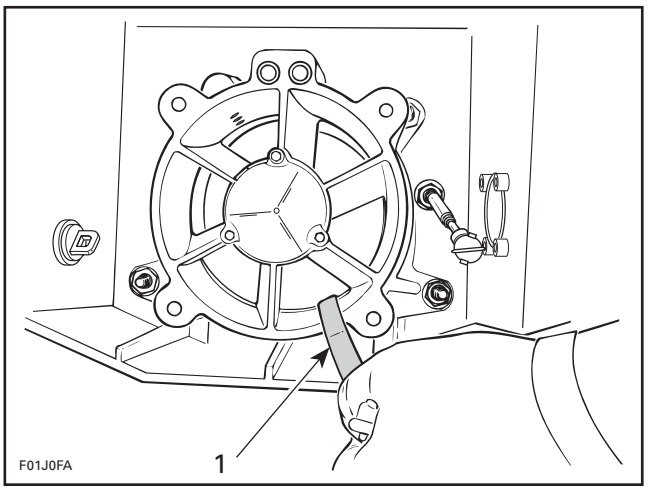

TYPICAL — MEASURING FROM VENTURI SIDE

1. *Feeler gauge*

NOTE: Remember to stay out of shallow water, avoid sand and rocks going through jet pump and damaging wear ring. Scratches in wear ring reduce efficiency.

Impeller Identification

To identify the impellers, refer to the following illustration and charts.

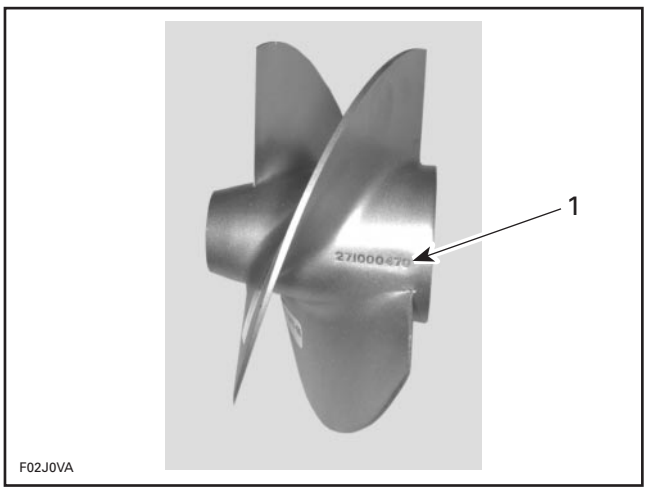

1. *Stamped part number*

IMPELLER APPLICATION CHART

MODEL	MODEL NUMBER	YEAR	PITCH ANGLE	MATERIAL	P/N
SP	5802	1989	18.8	aluminum	271 000 016
	5803	1990	18.8	aluminum	271 000 016
	5804	1991	18.8	aluminum	271 000 016
	5805	1992	18.8	aluminum	271 000 016
	5806	1993	18.8	aluminum	271 000 016
	5870	1994	18.8	aluminum	271 000 016
	5873	1995	18.8	aluminum	271 000 016
	5876	1996	18.8	aluminum	271 000 016
	5879	1997	16-35	aluminum	271 000 668
SPI	5808	1993	17.7	stainless	271 000 227
	5872	1994	14-21	stainless	271 000 030
	5875	1995	11-26	stainless	271 000 182
	5878	1996	11-26	stainless	271 000 182
SPX	5807	1993	14-21	stainless	271 000 030
	5871	1994	11-26	stainless	271 000 182
	5874	1995	11-23	stainless	271 000 445
	5877	1996	11-24	stainless	271 000 497
	5661/5834	1997	16-23	stainless	271 000 331
GS	5621	1997	11-22	stainless	271 000 497
GSI	5622	1997	11-22	stainless	271 000 497
GSX	5620	1996	17-25	stainless	271 000 660
	5624	1997	16-23	stainless	271 000 331
GSX Limited	5625	1997	9-21	stainless	271 000 654
XP	5850	1991	11-26	stainless	271 000 182
	5851	1992	11-26	stainless	271 000 182
	5852	1993	11-26	stainless	271 000 182
	5854	1994	11-23	stainless	271 000 367
	5855	1994	11-26	stainless	271 000 182
	5857	1995	11-24	stainless	271 000 458
	5858	1996	17-25	stainless	271 000 331
	5662	1997	16-23	stainless	271 000 331
XP 800	5856	1995	17-25	stainless	271 000 331
HX	5880	1995	11-24	stainless	271 000 458
	5881	1996	11-24	stainless	271 000 497
	5882	1997	11-22	stainless	271 000 497
GT	5810	1990	17	stainless	271 000 215
	5811	1991	17	stainless	271 000 215
GTS	5812	1992	17	stainless	271 000 215
	5813	1993	17	stainless	271 000 215
	5814	1994	14-20	stainless	271 000 299
	5815/5816	1995	10-25	stainless	271 000 416
	5817	1996	10-25	stainless	271 000 416
	5818	1997	11-22	stainless	271 000 470

IMPELLER APPLICATION CHART

MODEL	MODEL NUMBER	YEAR	PITCH ANGLE	MATERIAL	P/N
GTI	5865/5866/5867	1996	11-24	stainless	271 000 470
	5641	1997	11-22	stainless	271 000 470
GTX	5860	1992	18.3	stainless	271 000 123
	5861	1993	18.3	stainless	271 000 123
	5862	1994	15-23	stainless	271 000 280
	5863/5864	1995	11-24	stainless	271 000 454
	5640	1996	17-25	stainless	271 000 660
	5642	1997	16-23	stainless	271 000 660

NOTE: Impeller may be interchangeable to suit the required performance of the course type.

IMPELLER SPECIFICATIONS AND BOOT APPLICATIONS

IMPELLER P/N	IMPELLER SPECIFICATION	BOOT P/N
271 000 028	18° cast aluminum	271 000 015 293 300 015 (O-ring)
271 000 086	18° die-cast aluminum	271 000 114
271 000 235	18° die cast aluminum	271 000 114
271 000 052	17° satin finish stainless steel	271 000 055
271 000 215	17° satin finish stainless steel	271 000 114
271 000 046	17.7° polished stainless steel	271 000 069
271 000 199	17.7° satin finish stainless steel	271 000 069
271 000 227	17.7° satin finish stainless steel	271 000 114
271 000 123	18.3° satin finish stainless steel	271 000 114
271 000 115	19.0° satin finish stainless steel	271 000 114
271 000 230	16/20.5° progressive pitch satin finish stainless steel	271 000 114
271 000 182	14/21° progressive pitch satin finish stainless steel	271 000 104 271 000 313 (ring)
271 000 016	18.8° Cast aluminum	271 000 114
271 000 030	14/21° progressive pitch satin finish stainless steel	271 000 114
271 000 299	14/20° progressive pitch satin finish stainless steel	271 000 114
271 000 307	16/24° progressive pitch satin finish stainless steel	271 000 305
271 000 280	15/21° progressive pitch satin finish stainless steel	271 000 305
271 000 331	progressive pitch satin finish stainless steel	271 000 104 271 000 313 (ring)
271 000 367	11/21° progressive pitch satin finish stainless steel	271 000 104 271 000 313 (ring)
271 000 416	15/21° progressive pitch satin finish stainless steel	271 000 104 271 000 313 (ring)
271 000 417	10/22° progressive pitch satin finish stainless steel	271 000 422 271 000 434 (ring)
271 000 445	11/21° progressive pitch satin finish stainless steel	271 000 104 271 000 313 (ring)
271 000 454	10/22° progressive pitch satin finish stainless steel	271 000 422 214 000 434 (ring)
271 000 458	10/22° progressive pitch satin finish stainless steel	271 000 104 271 000 313 (ring)
271 000 470	10/22° progressive pitch satin finish stainless steel	271 000 422 271 000 434 (ring)

IMPELLER PITCH CHART

NOTE: The following chart could be used as a guide to help optimize pitch for your application.

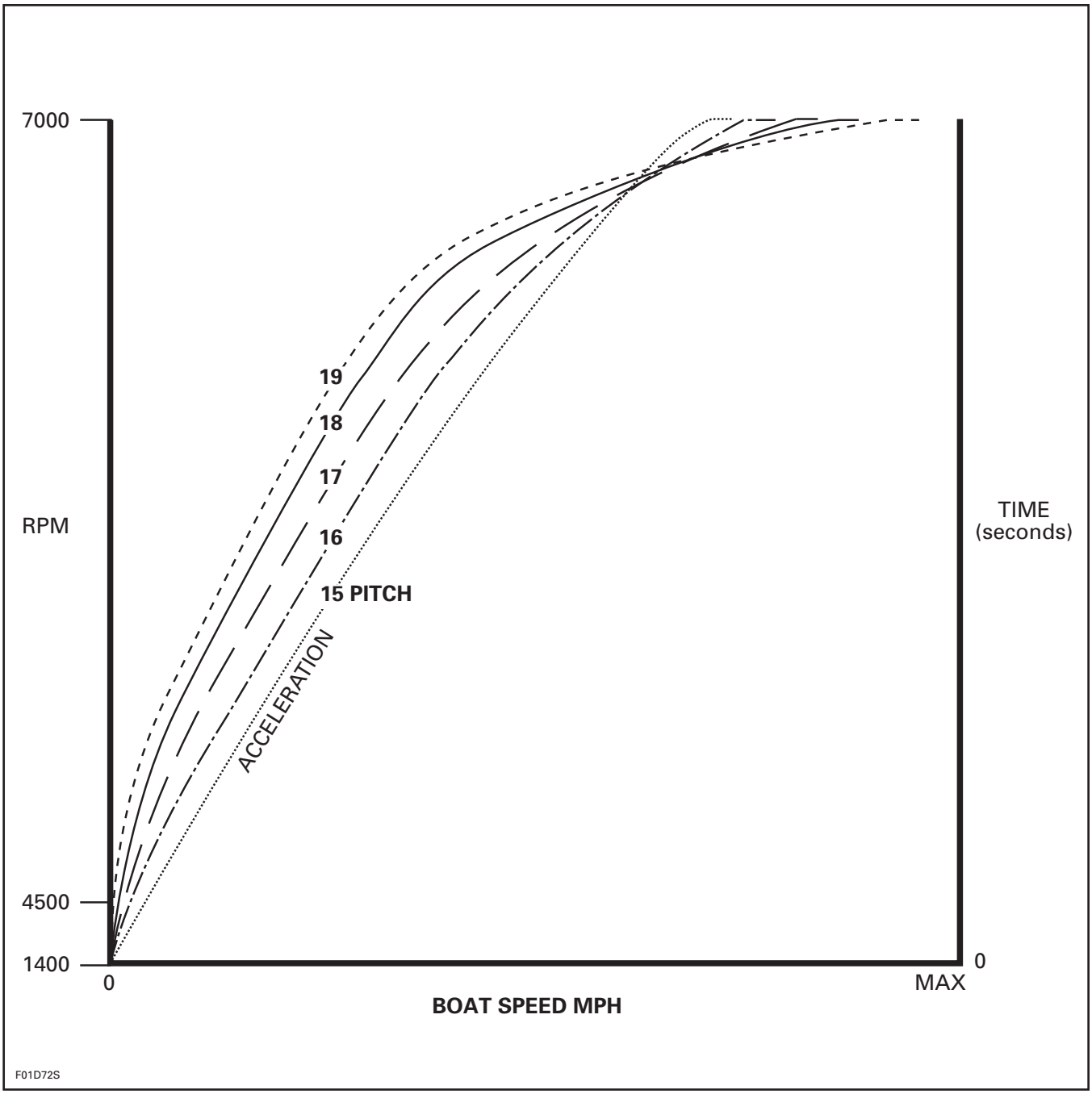

ENGINE/JET PUMP ALIGNMENT

Alignment is necessary to minimize power loss and eliminate possible vibration and/or damage to components. Check alignment of your engine/jet pump using the following special alignment tools:

NOTE: The alignment tool is available through your dealer.

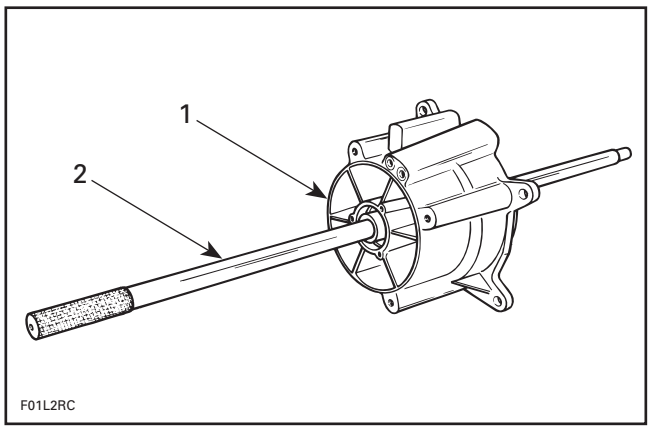

1. *Housing (P/N 295 000 090)*
2. *Alignment shaft (P/N 295 000 093) or (P/N 295 000 141) for the HX and XP models*

HX and XP (5662) Models

On these models, the PTO flywheel adapter (P/N 295 000 157) must be used in conjunction with the alignment shaft.

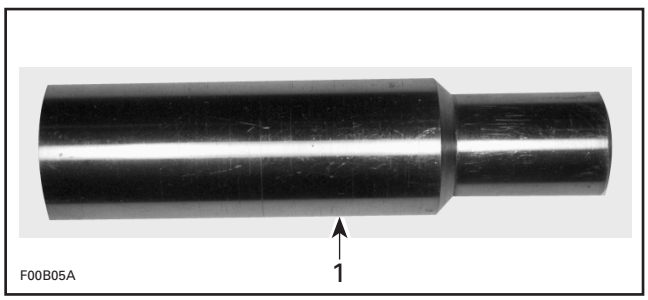

1. *Adapter (P/N 295 000 157)*

NOTE: Ensure the mid bearing is removed to check engine alignment.

All Models

To verify alignment proceed as follows:

– Install housing on hull with 4 nuts.

– Carefully slide shaft through housing.

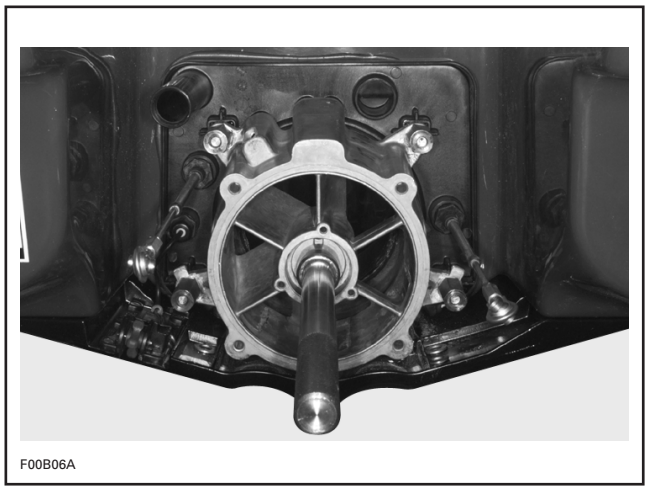

TYPICAL

– Insert shaft end into PTO flywheel.

NOTE: Ensure the protective hose and carbon ring is removed to check engine alignment. If the alignment is correct, the shaft will slide easily without any deflection in PTO flywheel.

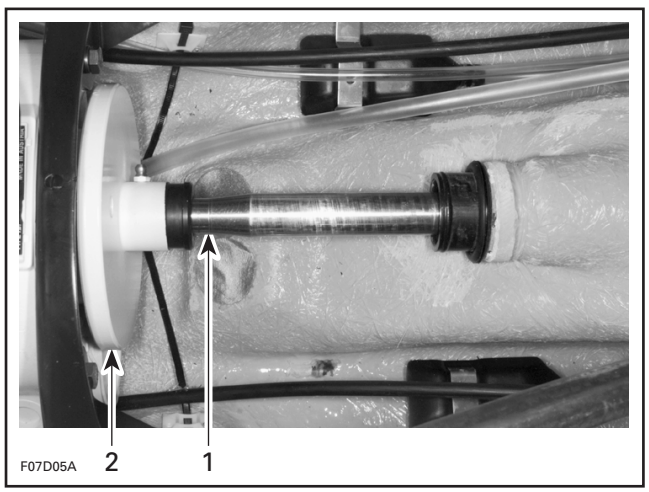

TYPICAL

1. *Alignment shaft*
2. *PTO flywheel*

If the alignment is incorrect loosen engine support screws to enable to align PTO flywheel with shaft end.

NOTE: Use shim(s) (P/N 270 000 024) or (P/N 270 000 025) between engine support and rubber mounts to correct alignment.

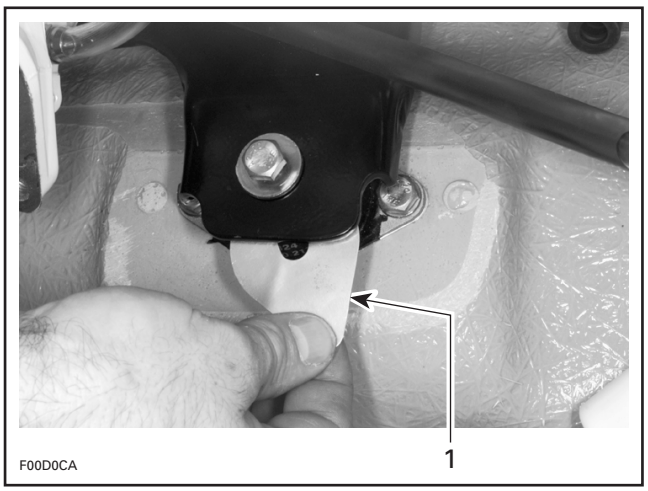

TYPICAL
1. *Shim*

CAUTION

Whenever shims are used to correct alignment, never install more than 1.3 mm (0.051 in) shim thickness. If alignment cannot be obtained verify for engine support bending.

CAUTION

Some models require a shim between hull and pump; if shim has been removed at time of pump disassembly, be sure to reinstall it. If this shim is required for your watercraft and not reinstalled, engine and jet pump alignment will be altered.

FUNCTIONS OF THE VARIABLE TRIM SYSTEM (VTS)

To obtain optimal performance, push VTS button located on left side of handlebar, or turn knob on left side of pump body, depending on the model of watercraft.

This adjustment changes the jet pump steering nozzle position which compensates for load and thrust.

When the nozzle is up, the bow of the watercraft comes up.

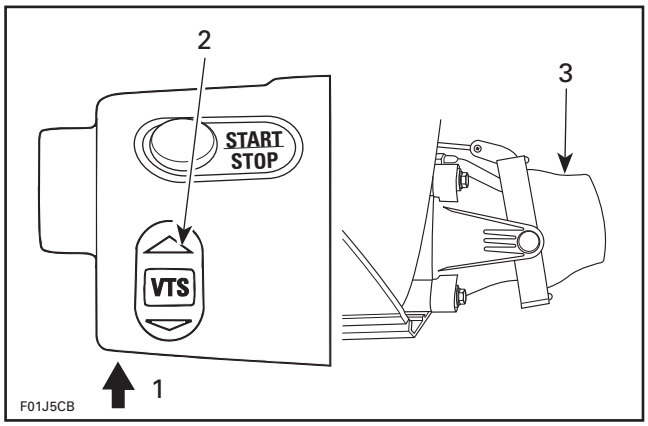

1. *Bow up*
2. *Push on VTS button UP position*
3. *Nozzle up*

When the nozzle is down, the bow comes down.

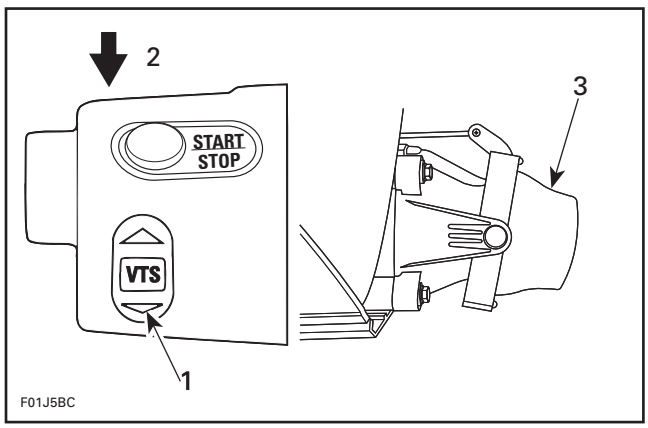

1. *Push on VTS button DOWN position*
2. *Bow down*
3. *Nozzle down*

According to boat load and water conditions, the driver can trim the watercraft as desired.

CAUTION

Trim ring and/or nozzle must not interfere at any position. Damage to cables and/or venturi housing will occur if adjustments are not done properly.

For adjustment procedures refer to appropriate model year *Shop Manual*.

PROPULSION SYSTEM MAINTENANCE

To obtain optimum efficiency of jet pump and to eliminate backlash in propulsion and drive system, the following maintenance items must be checked regularly.

– Verify oil condition and replace oil regularly. A whitish oil indicates water contamination. Use only SEA-DOO JET PUMP SYNTHETIC OIL (P/N 293 600 011).

– Using a grease gun, carefully lubricate PTO flywheel and seal carrier (if applicable) with synthetic grease (P/N 293 550 010). Stop greasing as soon as the first bit of grease comes out from under seals.

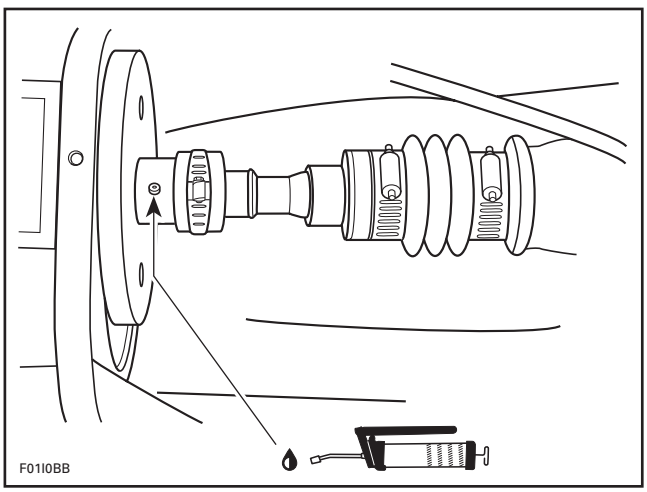

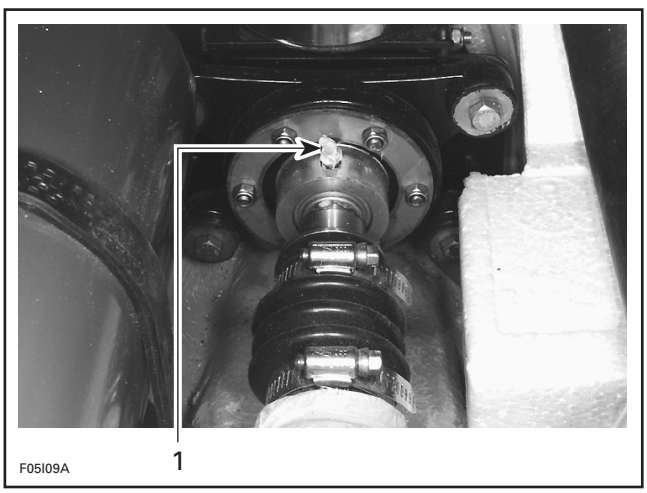

SEAL CARRIER OF DRIVE SYSTEM (HX AND XP 5662)

1. Grease fitting

– Verify impeller shaft end play. For racing purposes, maximum permissible end play (new) is 0.12 – 0.54 mm (.005 – .021 in). Excessive play comes from worn protrusion (end stop) inside housing cover. Excessive end play will negatively affect performance.

Visually inspect protrusion (end stop) inside cover. If worn, a small peak in center will be apparent.

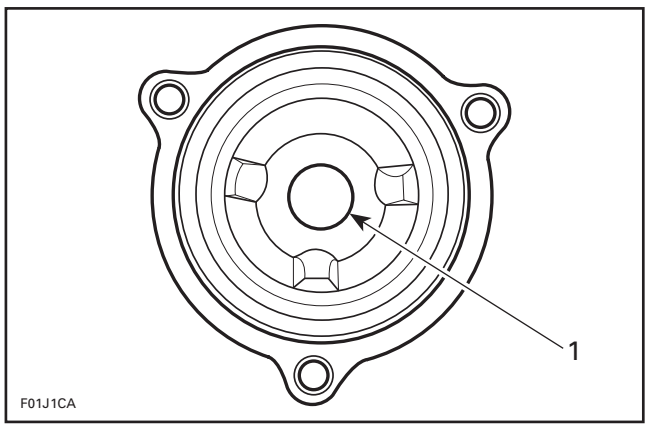

1. Protrusion

NOTE: On 1997 Sea-Doo watercraft, the cover has a pusher with a spring inside. The purpose of the pusher is to reduce drivetrain noise. Check pusher for wear. The cover retrofits earlier models.

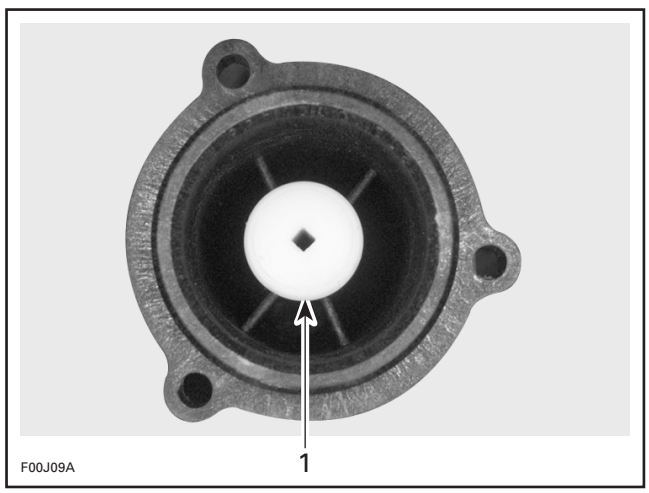

1. Pusher

– Lubricate drive shaft and impeller splines regularly using synthetic grease. The jet pump must be disassembled and drive shaft removed to perform this maintenance. This is a good time to inspect spline condition of your drive shaft. If excessive drive shaft wear is detected both PTO flywheel and impeller should be inspected.

TABLE OF CONTENTS

EQUIVALENT WEIGHTS AND MEASURES CHART 05-2
GLOSSARY OF TERMS IN PERSONAL WATERCRAFT RACING 05-3
FLAGS 05-4
RACER'S LOG 05-5
AFTERMARKET MANUFACTURERS 05-6

EQUIVALENT WEIGHTS AND MEASURES CHART

LINEAR MEASURE	
1 Inch = 25.4 Millimeters (mm)	1 Millimeter = .03937 Inch
1 Inch = 2.54 Centimeters (cm)	1 Centimeter = .3937 Inch
1 Foot = .3048 Meter (m)	1 Meter = 3.2808 Feet
1 Yard = .914 Meter (m)	1 Meter = 1.093 Yards

AREA	
1 Sq. Foot = 144 Sq. Inches = 929.03 (cm^2)	
1 Sq. Inch = 6.4516 cm^2	1 cm^2 = .155 Sq. Inch
1 Sq. Foot = .092 Sq. Meter (m^2)	1 m^2 = 10.8 Sq. Feet

WEIGHT	
1 Ounce = 28.35 Grams (g)	1 Gram = .03527 Ounce
1 Pound = .4536 Kilogram (kg)	1 Kilogram = 2.2046 Pounds

VOLUME		
1 Fl.U.S. Ounce = 29.574	Milliliters = .2957	Deciliter = .0296 Liter
1 Fl. U.S Pint = 473.18	Milliliters = 4.7316	Deciliters = .4732 Liter
1 Fl. U.S.Quart = 946.35	Milliliters = 9.4633	Deciliters = .9463 Liter
1 U.S. Gallon = 128 oz = 3.785 Liters		
1 Cu. Inch = 16.387 Cu. cm		
1 Cu. Centimeter = .061 Cu. Inch		
1 Cu. Foot = 2.831.16 Cu. Cm		
1 Cu. Decimeter = .0353 Cu. Foot		
1 Cu. Yard = .7646 Cu. Meter		
1 Dry Quart = 32 oz = 1.101 Liters		

TEMPERATURE	
32° Fahrenheit = 0° Celsius	0° Fahrenheit = –17.8° Celsius
°F = (°c × 1.8) + 32)	°C = (°F – 32) ÷ 1.8

GLOSSARY OF TERMS IN PERSONAL WATERCRAFT RACING

Bail:	To wipe out, to fall.
Bond Flange:	The bond flange is the overlapping/mating section where the deck (upper) and hull (lower) portions are joined.
Buoy:	Floating object anchored in the water designating race course.
Course Marshall:	An official located on the race course to help control the race as well as to assist downed riders.
Deck:	The structural body of the watercraft located above the bond flange.
Holder:	The person that holds your watercraft on the starting line prior to the start of the race.
Holeshot:	The process of arriving at the first turn ahead of the competition in a race.
Hull:	The structural portion of the boat below the bond flange.
Log Jump:	An obstacle used in closed course racing that consists of a row of tires which riders must pass over.
Pit Area:	Area used by riders and mechanics to make repairs, store watercraft, etc.
Porpoise:	The act of a watercraft nose pitching up and down in the water.
Race Director:	Person responsible for organizing a race.
Sponsor:	A person or group that provides support to a rider, promoter or association usually in exchange for promotion.
Staging Area:	Area near the starting line where riders and their watercraft wait for their scheduled race.
Starter:	Person who officially gives the signal to begin the race.
Starting Line:	A straight boundary that designates the beginning point of a race.
Technical Inspector:	Person who checks competing watercraft for safety and technical eligibility.
Wake:	The path created by a boat or watercraft in the water.
Pit Board:	The area where the schedule of events, rider starting, and finishing positions are posted.
Hull Id Number:	Permanently affixed identification number (serial number) affixed to the hull. NOTE: Carbon fiber hulls do not have Hull Id numbers, a number will be assigned by the sanctioning body for these hulls.
2 Card:	A sign held up by the starter signaling the riders to start their engines. During the display of the 2 card the rider may call a “2 minute hold” in the event of mechanical trouble, which will delay the start of the race.
1 Card:	The 2 card is turned around to display the number 1 to the riders indicating that the race is about to begin. At this point a 2 minute hold is no longer allowed.
1 Card (Displayed Sideways):	Indicates that the rubber band will snap within 1 to 5 seconds to start the race.

GLOSSARY OF TERMS IN PERSONAL WATERCRAFT RACING (CONTD)

2 Minute Hold:	During the display of the 2 card a racer may call a two minute hold in the event of problems on the starting line, for example, not being able to start the watercraft. Only the racer may call the two minute hold by holding up his hand displaying 2 fingers. The rider, watercraft, and holders must be on the line to call a 2 minute hold. Once the two minute hold is acknowledged the rider has two minutes to be ready to race. If after two minutes the racer is not ready to race the race will proceed with-out him.
Tech Inspection Sticker:	A sticker affixed to the watercraft to indicate that it has passed safety inspection.
Post Race Technnical Inspection:	All qualifying riders must report to the technical inspector after the event to have their watercraft checked for rule compliance.

FLAGS

Green Flag:	Used to start the race (when the rubber band start is not used) or signifies that the course is clear and the race is in progress.
Yellow Flag:	Warns the rider of a hazard on the course. After the yellow flag is displayed riders con-tinue with caution and be aware of hazards. You may continue to race in a responsible manner.
Red Flag:	Signifies the event will stop regardless of positions of machines on the race course. The red flag will be used if the race course has become hazardous or the start is jumped by one or more riders. Riders must return to the starting line with caution.
Black Flag:	When a rider is signaled with a black flag they must leave the race course immediately and report to the Race Director. This does not necessarily mean that an additional penalty will be given, but failure to obey the black flag may result in additional penalties.
Blue Flag with Diagonal Yellow Stripe:	Signals that a rider is being overtaken and lapped by another rider. Competitors must make way for overtaking racers to pass safely. Riders not yielding may be penalized.
Crossed Checkered and White Flags:	Signifies the halfway point of the race.
White Flag:	Signifies the riders have started the last lap.
Checker Flag:	Signifies the completion of the race. As a rider passes the checkered flag they have completed the last lap of the race regardless of the number of laps they have completed.

RACER'S LOG

Event:	Date:	Sheet Number:
Association:	Race Director:	
Temperature:	Barometric Pressure:	Humidity:
Water Temperature:		

WATERCRAFT			NOTES:
Model Number:			
Hull Identification Number:			
Engine Identification Number:			
Weight:			
CARBURETION	PTO	MAG	NOTES:
Main Jet:			
Pilot Jet:			
Needle Valve:			
Low Speed Screw:			
High Speed Screw:			
Pop-off Pressure/Needle Valve Spring:			
Fuel Type:			
LUBRICATION			NOTES:
Fuel/Oil Mixture:			
Oil Type:			
IGNITION SYSTEM			NOTES:
Timing:			
Spark Plug:			
Rev Limiter Setting:			
JET PUMP			NOTES:
Impeller Pitch/Material:			
Intake Grate:			

It is important to keep accurate records regarding the race site and the setup of your watercraft for future reference. Doing this will enable you to easily set up your race boat for future events and determine the best tuning for various conditions.

AFTERMARKET MANUFACTURERS

Aftermarket manufacturers produce products that can be used to replace original equipment parts on your watercraft. Some of these parts are designed to simply give the operator a choice of color or styling while others are intended to improve the performance characteristics of the watercraft. Sea-Doo has encountered many manufacturers of aftermarket parts that have made claims about their product that later could not be validated. Some products actually had an adverse affect on performance compare to the production item or caused vehicle damage. It must also be noted that Sea-Doo can not verify every product claim made by manufacturers due to the constant development of new aftermarket products.

Sea-Doo has found the following aftermarket manufacturers have proven their products to be reliable and of high quality. We recommend these manufacturers based on their previous performance records. Sea-Doo takes no responsibility for parts and products not installed as original equipment. *In fact, the use of most aftermarket parts will invalidate the vehicle warranty as provided by law. USE AFTERMARKET PARTS AT YOUR OWN RISK.*

BEACH HOUSE EXPRESS **(Racing Parts and Sponsons)** Brian Bevins 301 North Gulf Drive Bradenton Beach, FL 34217 Phone: (941) 779-1151 Fax: (941) 778-1886 www.bv.net/beachhouse/sponsons/	EVOLUTION MARINE **(Flame Arresters and Performance Parts)** 215 St. Andrews Road Newport Beach, CA 92663 Phone: (714) 722-8968 Fax: (714) 722-8968
FACTORY PIPE **(Exhaust Systems)** 150 Parducci Road Ukiah, CA 95428 Phone: (707) 463-1322 Fax: (707) 463-1384 www.factorypipe.com	HOT PRODUCTS **(Racing Parts)** 8949 Kenamar Dr. no. 111 San Diego, CA 92121 Phone: (619) 566-4454 Fax: (619) 566-3625 www.exceed.com/hot1
JET DYNAMICS **(Propulsion Components and Intake Grates)** Rt 1, P.O. Box 1762 Burley, ID 83318 Phone: (208) 678-7038 Fax: (208) 654-2446	MILLER RACING **(Big Bore and Stroker Motors)** Mel Miller 9941 Belcher St. Downey, CA 90242 Phone: (310) 803-5309
MSD IGNITIONS **(Ignition Components)** 12120 Esther Lama, Suite 114 El Paso, TX 79936 Phone: (915) 857-5200 Fax: (915) 858-9241 www.msdignition.com	NEPTUNE RACING **(Carburetors and Exhaust Systems)** Bo Dupriest 2348 Aqulios Ave. S.E. Palm Bay, FL 32909 Phone: (407) 768-9908 Fax: (407) 952-7289
NOVI PERFORMANCE PRODUCTS **(Race Parts and Flame Arresters)** Lee Robison 2 Rutledge Circle Fletcher, NC 28732 Phone: (704) 687-7555 Fax: (704) 687-7556	OCEAN PRO ENGINEERING **(Race Parts and Flame Arresters)** 4119 Avenida De La Palma Oceanside, CA 92056 Phone: (619) 631-5501 Fax: (619) 631-5504

ODYSSEY RACING (Racing Parts and Engine Modifications) R. R. 2 Courtland Ontario, Canada, N0J 1E0 Phone: (519) 688-6818 Fax: (519) 688-3099	R & D RACING PRODUCTS 10504 Norwalk Blvd. Santa Fe Springs, CA 90670 Phone: (562) 906-1190 Fax: (562) 941-5563
RACE PAK COMPETITION SYSTEMS (Data Acquisition) 26806 Vista Terrace Lake Forrest, CA 92630 Phone: (714) 580-6898 Fax: (714) 580-6897	RED TOP CARBURETORS/TRUE CAD DESIGNS Kevin Groah 2121 Watts Drive Mims, FL 32754 Phone: (407) 383-4713 Fax: (407) 383-4713 http://www.bv.net/~kevinb
ROSSIER ENGINEERING (Race Parts and Engine Modifications) 1340 Okray Avenue Plover, WI 54467 Phone: (715) 341-9919 Fax: (715) 341-9875	SKAT TRAK PERFORMANCE PRODUCTS (Impellers) 654 Avenue K P.O. Box 518 Calimessa, CA 92302 Phone: (714) 795-2505 Fax: (714) 795-6351
SOLAS U.S.A. INCORPORATED (Impellers) 5200 NW 165th St. Miami, FL 33041 Phone: (305) 625-4389 Fax: (305) 625-4536 www.solas.com	TEAM BUTCH (Racing Parts) 7357 Expressway Court, Suite A Grand Rapids, MI 49548 Phone: (616) 281-7511 Fax: (616) 281-7515 www.teambutch.com
UMI RACING (Steering Components) 7442 East Brutherus Road Scottsdale, AZ 85260 Phone: (602) 951-9029 Fax: (602) 951-3469 www.umiracing.com	WATERCRAFT MAGIC (Race Parts and Engine Modifications) Bill O'Neal 2264 East Alosta Glendora, CA 91740 Phone: (818) 914-9509 Fax: (818) 914-6019
WESTCOAST PERFORMANCE PRODUCTS (Racing Parts and Carbon Fiber Hulls) 3100 East Coronado Street Anahiem, CA 92806 Phone: (714) 630-4411 Fax: (714) 630-8874 www.teamwpp.com	RADAR SALES (Radar Guns) 5640 International Parkway Minneapolis, MN 55428 Phone: (612) 533-1100 Fax: (612) 533-1400 www.radarsales.com

™TRADEMARKS OF BOMBARDIER INC.
© 1997 BOMBARDIER INC. ALL RIGHTS RESERVED
LITHO'D IN CANADA